cleansat

BB07
Repressurisation Module
Airbus DS GmbH, Lampoldshausen

24/05/2016

Confidential and/or proprietary to Airbus DS GmbH resp. its succeeding company Airbus Safran Launchers GmbH after transfer

AIRBUS DEFENCE & SPACE

AIRBUS DEFENCE & SPACE OHB ThalesAlenia Space

European Space Agency

Description of proposed technology BB07

- Parallel redundant fluid paths with solenoid valves plus check valves for each fluid path as baseline plus investigation of derivatives to this baseline
- Determination of max. tank volume for ordinary Mono Prop Systems as base
- Evaluation of passive Blow Down Mode vs. active Pressure Regulation
- Estimation of re-pressurization time dependant on baseline mission (tbd)
- Overview of component trade will be provided (see below)
- Components assessment in integrated cartridge and coaxial design will be provided

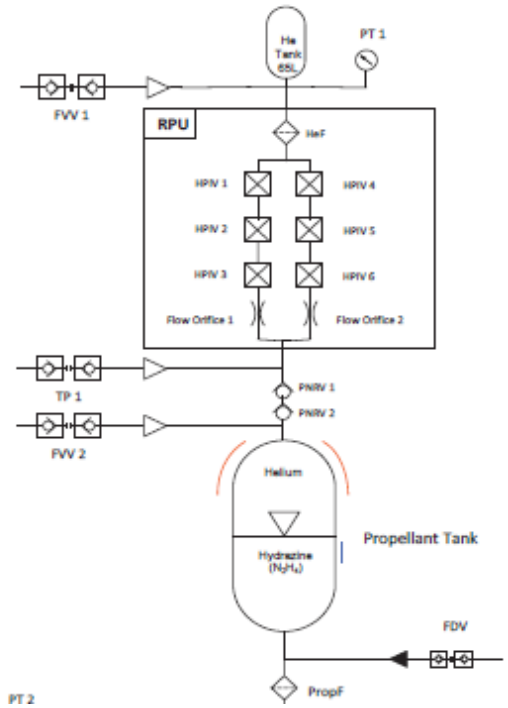

Confidential and/or proprietary to Airbus DS GmbH resp. its succeeding company Airbus Safran Launchers GmbH after transfer

Development of BB07

- Elaboration of higher level requirements and derivation of specific BB requirements
- Presentation of possible flow schematics and corresponding component lists
- Presentation of preliminary design concepts for catridge and coaxial design
- Evaluation of pros and cons of each concept w.r.t. cost, mass, volume and functionality

- Technical Challenges:

- Long mission duration requirement leads to high lifetime requirements of system. Radiation exposure !
- Additional re-pressurization cycles impact on tank to be assessed
- The subsystem shall be developed with the focus to reduce mass, volume and number of components

Confidential and/or proprietary to Airbus DS GmbH resp. its succeeding company Airbus Safran Launchers GmbH after transfer