BIRA·IASB

aeronomie·be

KONINKLIJK BELGISCH INSTITUUT VOOR RUIMTE-AERONOMIE INSTITUT ROYAL D'AERONOMIE SPATIALE DE BELGIQUE ROYAL BELGIAN INSTITUTE OF SPACE AERONOMY KONINKLIJK BELGISCH INSTITUUT VOOR RUIMTE-AERONOMIE INSTITUT ROYAL D'AERONOMIE SPATIALE DE BELGIQUE ROYAL BELGIAN INSTITUTE OF SPACE AERONOMY KONINKLIJ

Royal Belgian Institute for Space Aeronomy (BIRA-IASB)

Institut royal d'Aéronomie Spatiale de Belgique (IASB)

Koninklijk Belgisch Instituut voor Ruimte-Aeronomie (BIRA)

KONINKLIJK BELGISCH INSTITUUT VOOR RUIMTE-AERONOMIE INSTITUT ROYAL D'AERONOMIE SPATIALE DE BELGIQUE ROYAL BELGIAN INSTITUTE OF SPACE AERONOMY KONINKLIJK BELGISCH INSTITUUT VOOR RUIMTE-AERONOMIE INSTITUT ROYAL D'AERONOMIE SPATIALE DE BELGIQUE ROYAL BELGIAN INSTITUTE OF SPACE AERONOMY KONINKLIJ

SPENVIS Next Generation

ESTEC Contract No. 4000104812

— Final report —

Neophytos Messios

on behalf of the whole project team:

Outline

- ❑ The new SPENVIS system
- ❑ Supporting model developers
- ❑ The Human Machine Interface
- ❑ Machine-Machine Interfaces
- ❑ Recent developments

The new SPENVIS system

The SPENVIS Next Generation

Complete re-design of current SPENVIS-4 system developed in the frame of ESA's General Support Technology Programme (GSTP)

- ✓ web-based service oriented framework
- ✓ modular architecture allowing distributed deployment
- ✓ plug-in of models
- ✓ machine-to-machine interface

Overview of SPENVIS-NG

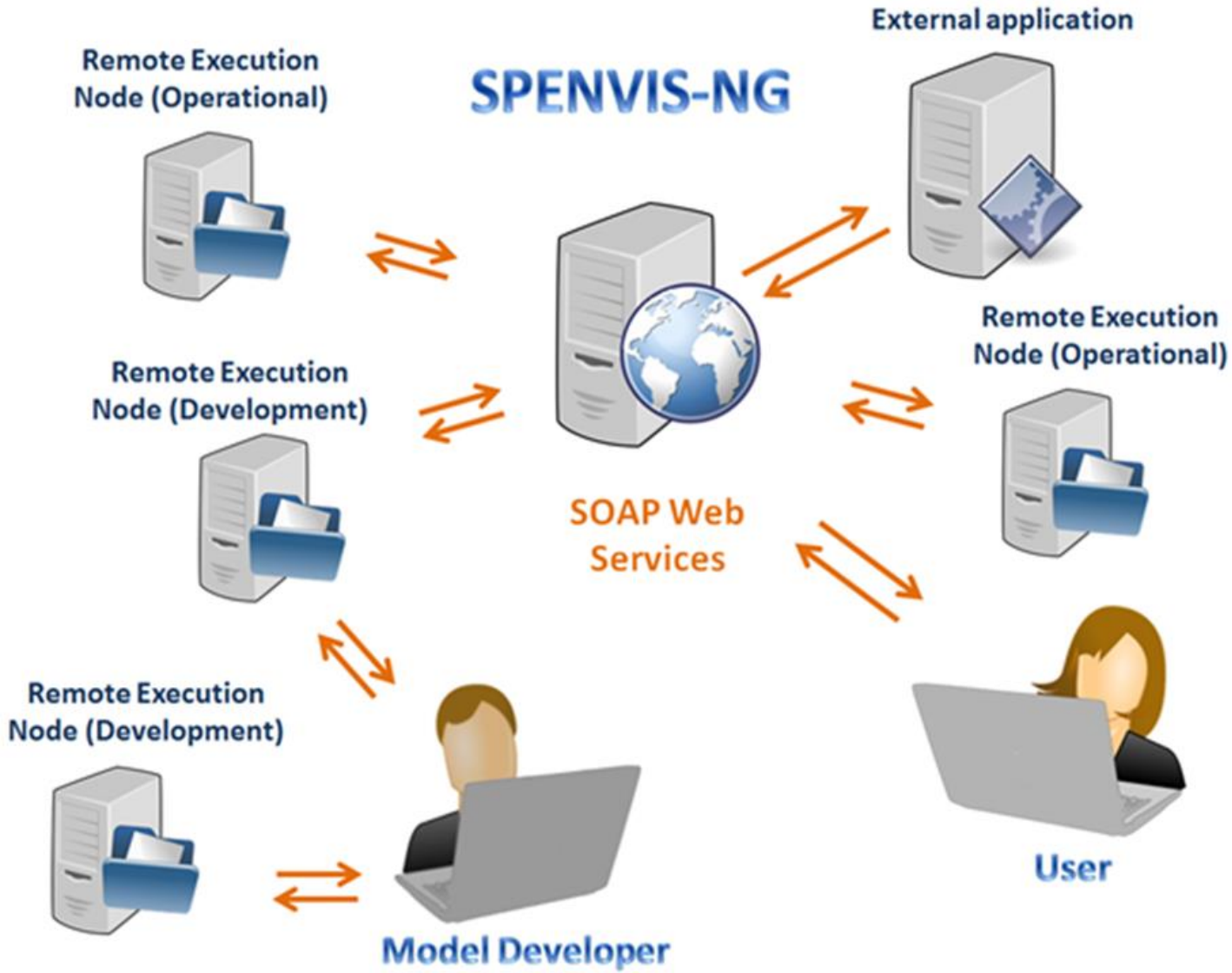

Two basic concepts

- Models and tools are embedded into **bundles**
  - ✓ manifest, binaries & execution script (ANT)
  - ✓ can be easily plugged into the system → deployment on an execution node
- SPENVIS-NG is task oriented → use of workflows
- A **workflow** describes how
  - ✓ the various models interact
  - ✓ the input interface shown to the user
  - ✓ the execution output is displayed

The SPENVIS-NG workflows

- Different types of workflows are supported
  - ✓ simple or complex (e.g. loops)
  - ✓ atomic → single model, parent/child
  - ✓ "all-in-one"
  - ✓ hybrid e.g. workflows based on ECSS recommendations
- SPENVIS-NG contains a number of **publicly** available workflows
- Also **user defined** workflows can be employed

“All-in-one” workflows

BELGISCH INSTITUUT VOOR RUIMTE-AERONOMIE INSTITUT D'AERONOMIE SPATIALE DE BELGIQUE BELGIAN INSTITUTE OF SPACE AERONOMY BELGISCH INSTITUUT VOOR RUIMTE-AERONOMIE INSTITUT D'AERONOMIE SPATIALE DE BELGIQUE BELGIAN INSTITUTE OF SPACE AERONOMY BELGISCH INSTITUUT VOOR RUIMTE-AERONOMIE INSTITUT D'AERO

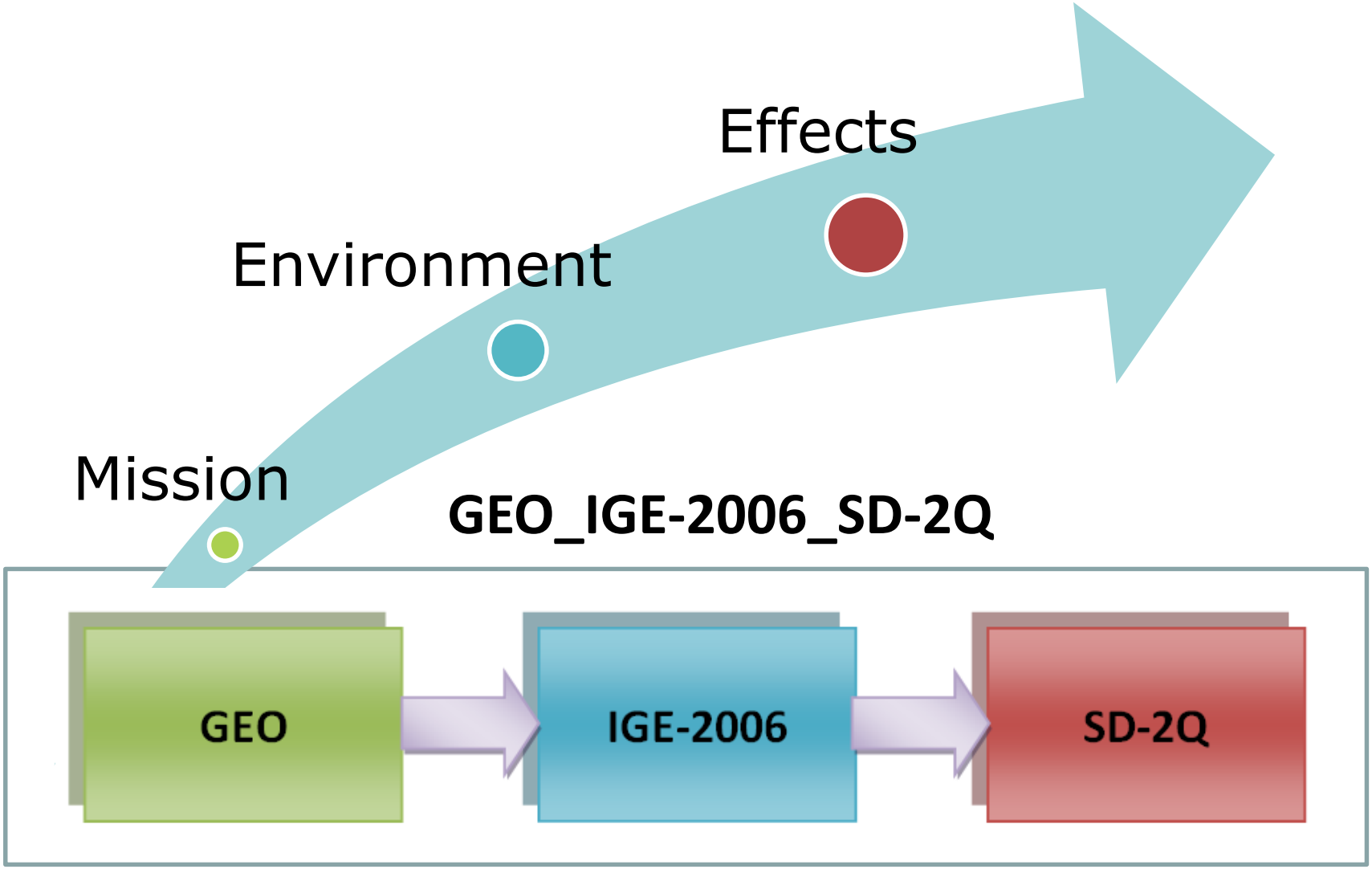

Atomic workflows

BELGISCH INSTITUUT VOOR RUIMTE-AERONOMIE INSTITUT D'AERONOMIE SPATIALE DE BELGIQUE BELGIAN INSTITUTE OF SPACE AERONOMY BELGISCH INSTITUUT VOOR RUIMTE-AERONOMIE INSTITUT D'AERONOMIE SPATIALE DE BELGIQUE BELGIAN INSTITUTE OF SPACE AERONOMY BELGISCH INSTITUUT VOOR RUIMTE-AERONOMIE INSTITUT D'AERO

Mission

Environment

Effects

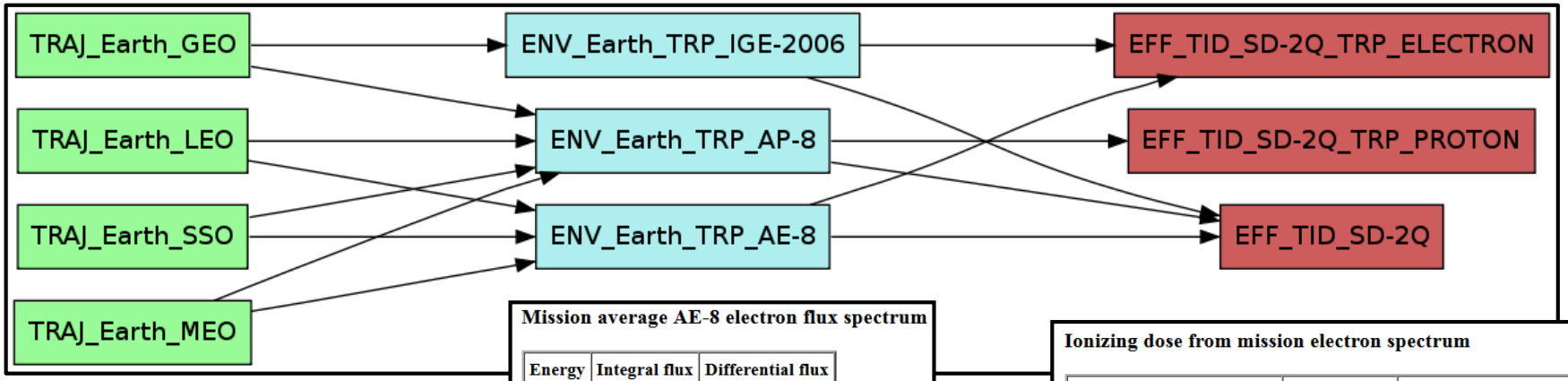

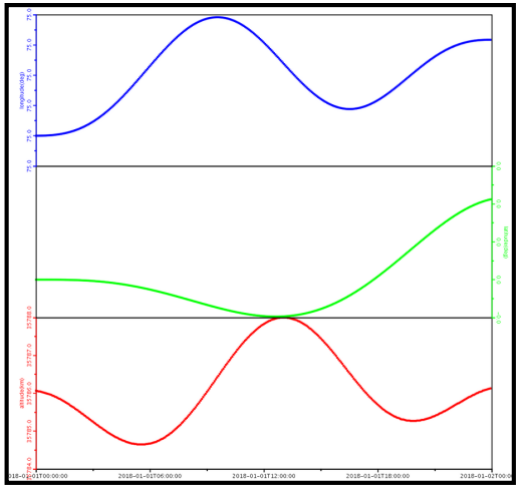

Mission average AE-8 electron flux spectrum

Energy	Integral flux	Differential flux
[MeV]	[$cm^{-2}\ s^{-1}$]	[$cm^{-2}\ MeV^{-1}\ s^{-1}$]
0.04	6.1051E8	1.071E10
0.1	1.3049E8	5.2911E9
0.2	5.2919E7	4.9974E8
0.3	3.0543E7	1.5909E8
0.4	2.1101E7	8.0172E7
0.5		
0.6		
0.7		

Mission average AP-8 proton flux spectrum

Energy	Integral flux	Differential flux
[MeV]	[$cm^{-2}\ s^{-1}$]	[$cm^{-2}\ MeV^{-1}\ s^{-1}$]
0.1	1573800.0	2.0385E7
0.15	763240.0	1.2036E7
0.2	370150.0	6003300.0
0.3	141490.0	1580400.0
0.4	54082.0	591530.0
0.5	23181.0	220730.0
0.6	9936.3	95343.0
0.7	4112.7	46811.0

Ionizing dose from mission electron spectrum

Eqv. Al absorber thickness	Electron dose	Bremsstrahlung dose
[mm]	[rad]	[rad]
0.05	7.2043E7	176880.0
0.1	2.4074E7	78549.0
0.2	9797500.0	37537.0
0.3	5978000.0	25426.0
0.4	4164600.0	19455.0
0.5	3106800.0	15948.0
0.6	2422800.0	13531.0
0.8	1594400.0	10352.0

Hybrid workflows

- **ECSS_TRP_SD-2Q+SD-2** → Runs trapped particle models, SD-2Q and SD-2 for specific trajectory
- **G4MULASSIS** → Generates main macro file and combines it with mission based GPS macros to run MULASSIS

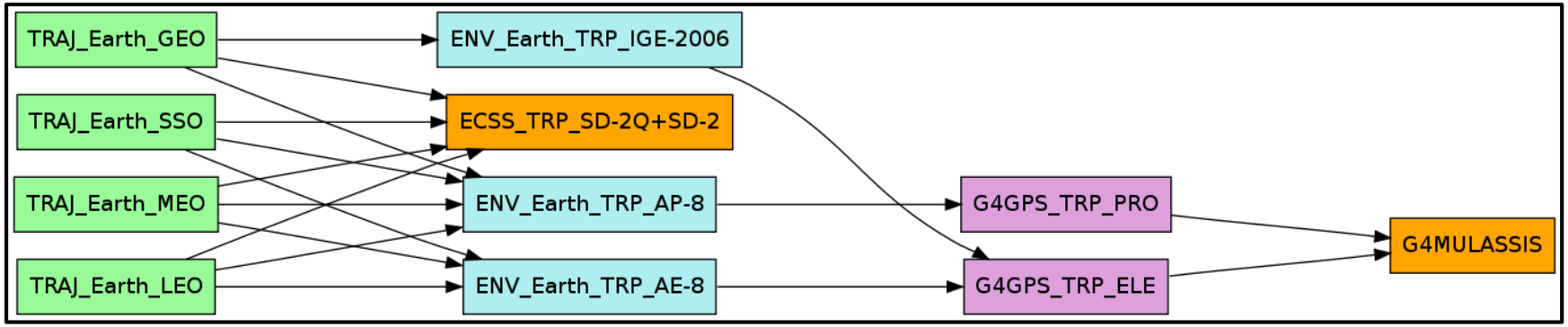

Available models

- New models integrated in SPENVIS-NG
  - ✓ SPENVIS-NG trajectory tool (NAIF SPICE toolkit)
  - ✓ IRENE AE-9/AP-9 (v1.30 & v.1.50)
  - ✓ Slot Region Radiation Environment Models (SRREM)
  - ✓ ESA MEO model
  - ✓ Geant4 Radiation Analysis for Space (GRAS) v3.4 & 4.0
  - ✓ Multi-Layered Shielding Simulation (MULASSIS) v1.26
  - ✓ Sector Shielding Analysis Tool (SSAT) v3.4
- Models migrated from SPENVIS-4
- JOREM Radiation Environment Model updates

How to use the system

Human Machine Interface (HMI)

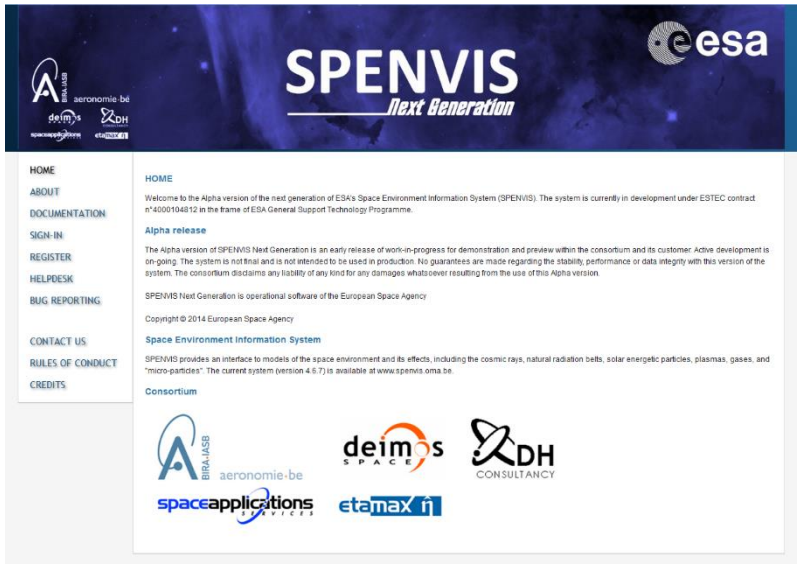

Machine-Machine Interface

- SPENVIS-NG Application Programming Interface (SAPI)
- Software Development Kit (SDK)
- Write own script

Supporting the model developers

Software Development Kit (SDK)

- Distributed upon request as a ZIP archive
- Checks development environment
- Emulates model bundle interaction with system

The SDK machinery

- Varius development tools (extension):
  - ✓ Saxon-HE package
  - ✓ STIL Tool Set (STILTS)
  - ✓ wrappers to transform CSV files into VOTables and vice versa
  - ✓ Python VOTable parser
- XML Validation tool for manifests & workflows
- Tool for interacting with a remote execution node

The SDK machinery


```
> java -jar Development/Bin/spenvis-sdk-500.jar -h
Missing required option: [-u URL of the execution node]
SPENVIS-NG SDK Tool
Usage: <cmd> -u <url> -[d|r|l|o|p|q] arg
       <cmd> -u <url> -x <bundle id> -v <input folder>
       <cmd> -u <url> -s <execution id>
       <cmd> -u <url> -z <execution id> -f <output folder>

Mandatory switch:
  -u  --url                URL of the execution node

Bundle switches:
  -r  --remove-bundle      Remove model bundle (by resource id)
  -d  --deploy-bundle      Deploy model bundle
  -l  --list-bundles       List bundles deployed on the node

Extension switches:
  -p  --remove-extension   Remove extension (by resource id)
  -q  --list-extensions    List extensions deployed on the node
  -o  --deploy-extension   Deploy extension

Bundle execution switches :
  -s  --execution-status   Get status of the execution (by execution id)
  -x  --execution-request  Request execution (by resource id)
  -z  --execution-output   Get the output zip file (by execution id)

Bundle execution arguments :
  -v  --input-folder       Folder containing input files, only used with -x switch
  -f  --output-folder      Folder name where the output will be written to, only
 used with -z switch

Other switches:
  -V  --verbose            Show more debugging infos
  -h  --help               Show this help
  -i  --info               Info about the node
```

SDK documentation

- "*Software Development Kit and Remote Execution Node Manual*" (v1.7 March 2017)
  - ✓ Tutorials (Windows and Linux)
  - ✓ "Hints and tips" section
  - ✓ Installation & configuration of remote execution node

The Human Machine Interface

Entry point

- Access from Web browser
- Requires registration to the system

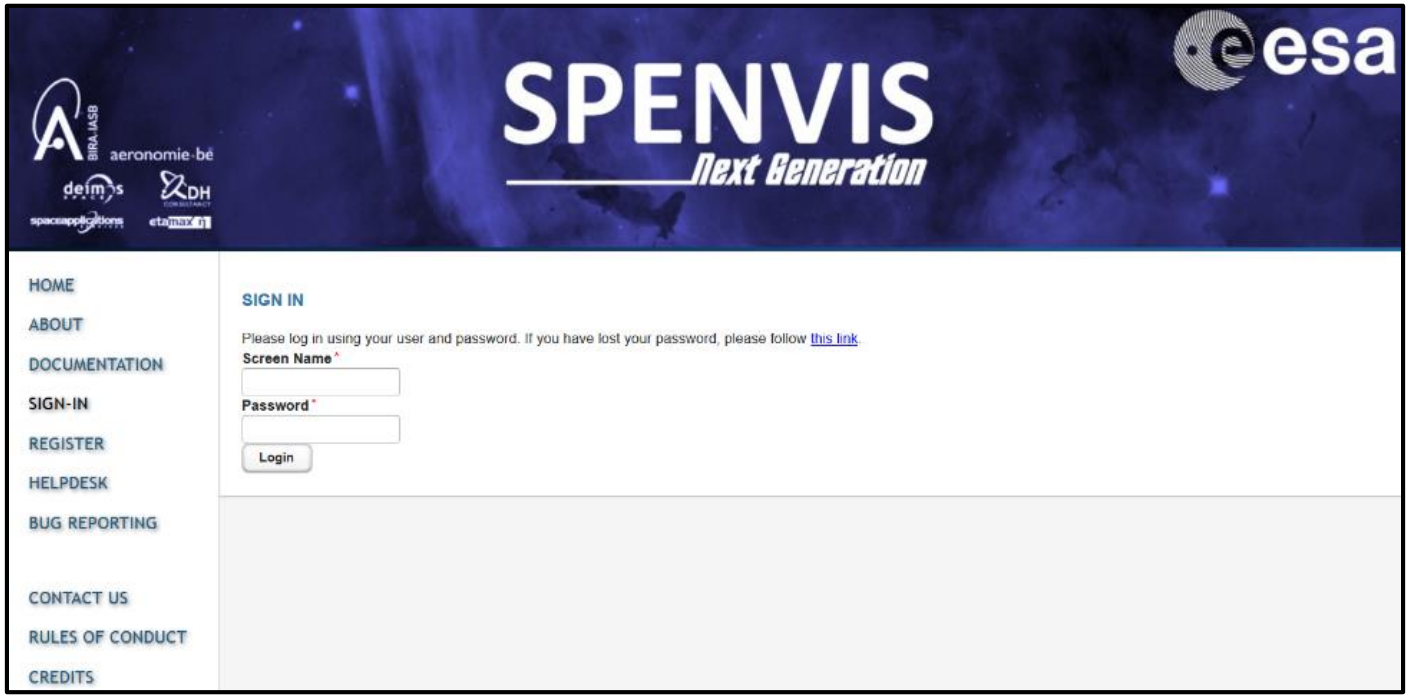

Public & User workflows

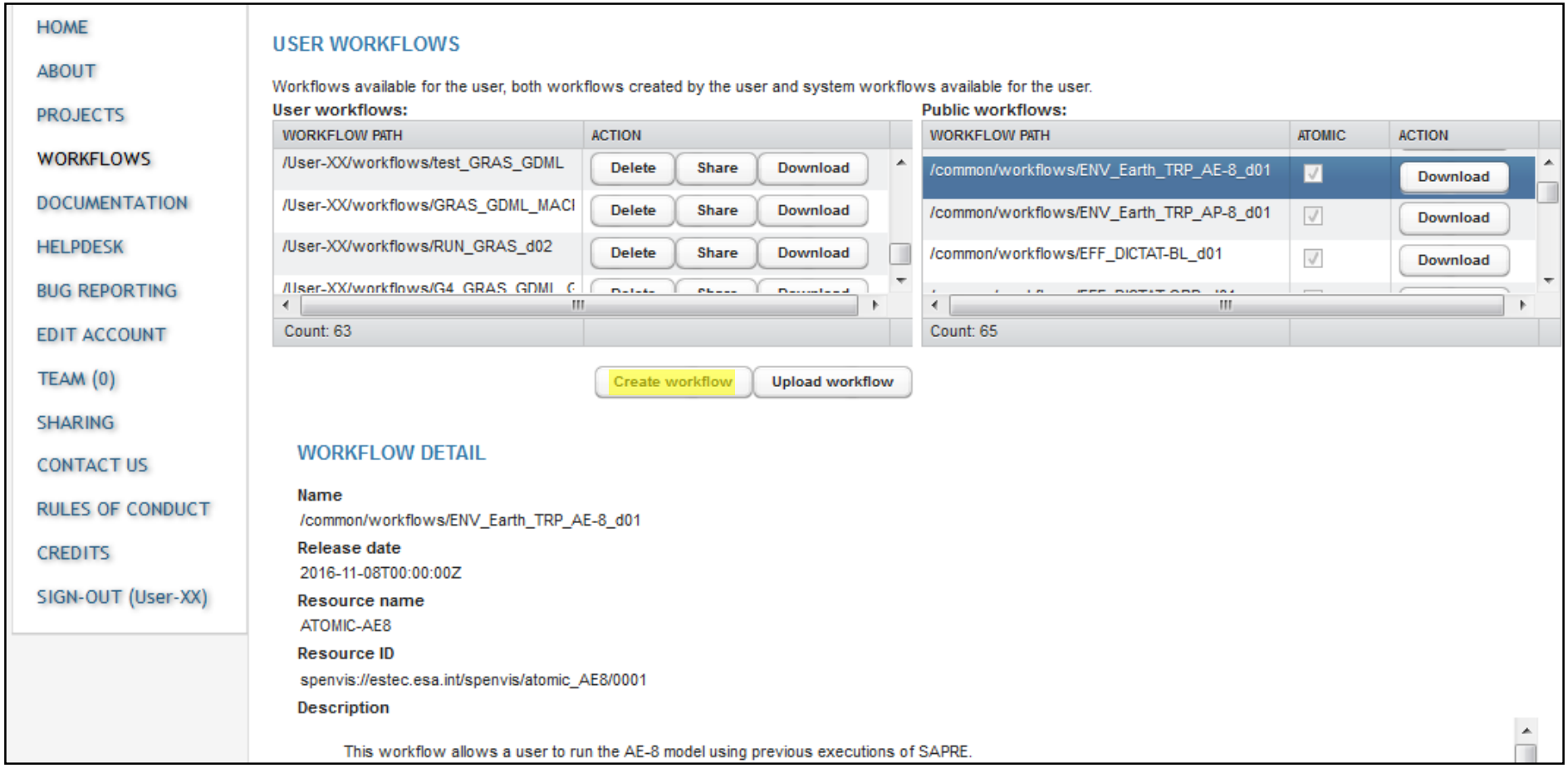

User projects

Existing projects

Projects are a core tool of SPENVIS. The system is designed so a user may be able to create a project so as to obtain certain results. A project may be composed of: Resources, Workflows, Models. That will, upon running, produce the desired results. The system allows the user great freedom when defining projects, resources or workflows but it is on the side of the user to use the tools in a sensible manner in order to obtain accurate results.

Reload project list

NAME	TITLE	PATH RESOURCE GROUP	LAST MODIFIED	LAST MODIFIED BY	ACTION
Geant4	test	/User-XX/projects/Geant4/data	2017-06-14T16:15:55.851+02:00	User-XX	Show Update Share Delete
API-Demo	test	/User-XX/projects/API-Demo/data	2017-09-11T14:51:01.096+02:00	User-XX	Show Update Share Delete
NASA_Workshop	Demo	/User-XX/projects/NASA_Workshop/data	2017-09-25T11:19:49.009+02:00	User-XX	Show Update Share Delete
Count: 3					

Create project

Select what to run

PROJECT: NASA_Workshop

Project list

Workflow executions | Project history

ID	NAME	STATUS	WORKFLOW	LAST ACTION	ACTION
19,902	LEO-01	FINISHED	/common/workflows/SEG_Earth_LEO_d02	2017-09-25T11:21:27.726+02:00	Delete Duplicate VOT
19,905	GEO-01	FINISHED	/common/workflows/SEG_Earth_GEO_d02	2017-09-25T11:24:59.962+02:00	Delete Duplicate VOT
19,908	AP-8_LEO-01	FINISHED	/common/workflows/ENV_Earth_TRP_AP-8_d02	2017-09-25T11:31:44.542+02:00	Delete Duplicate VOT
19,912	AP-8_GEO-01	FINISHED	/common/workflows/ENV_Earth_TRP_AP-8_d02	2017-09-25T11:38:27.546+02:00	Delete Duplicate VOT
19,915	AE-8_GEO-01	RUNNING	/common/wo	2017-	Duplicate Abort
19,916	SD2_AE-8_GEO-	WAITING_FOR_INPUTS	/common/wo	2017-	Delete Set input
	Count: 6				

Create execution | Refresh list

Create workflow Execution ×

Execution name*

AP-8_GEO-01

Select workflow*

/common/workflows/ENV_Earth_TRP_AE-8-MIN-SEE1_d01
/common/workflows/ENV_Earth_TRP_AE-8_d02
/common/workflows/ENV_Earth_TRP_AE-9_d01
/common/workflows/ENV_Earth_TRP_AP-8_d02
/common/workflows/ENV_Earth_TRP_AP-9_d01
/common/workflows/ENV_Earth_TRP_CRRESELE_d01
/common/workflows/ENV_Earth_TRP_CRRESPRO_d01
/common/workflows/ENV_Earth_TRP_ESA-MEO-LAT_d01
/common/workflows/ENV_Earth_TRP_ESA-MEO-LTerm_d01
/common/workflows/ENV_Earth_TRP_ESA-MEO-STAT_d01

User input: “all-in-one” workflow

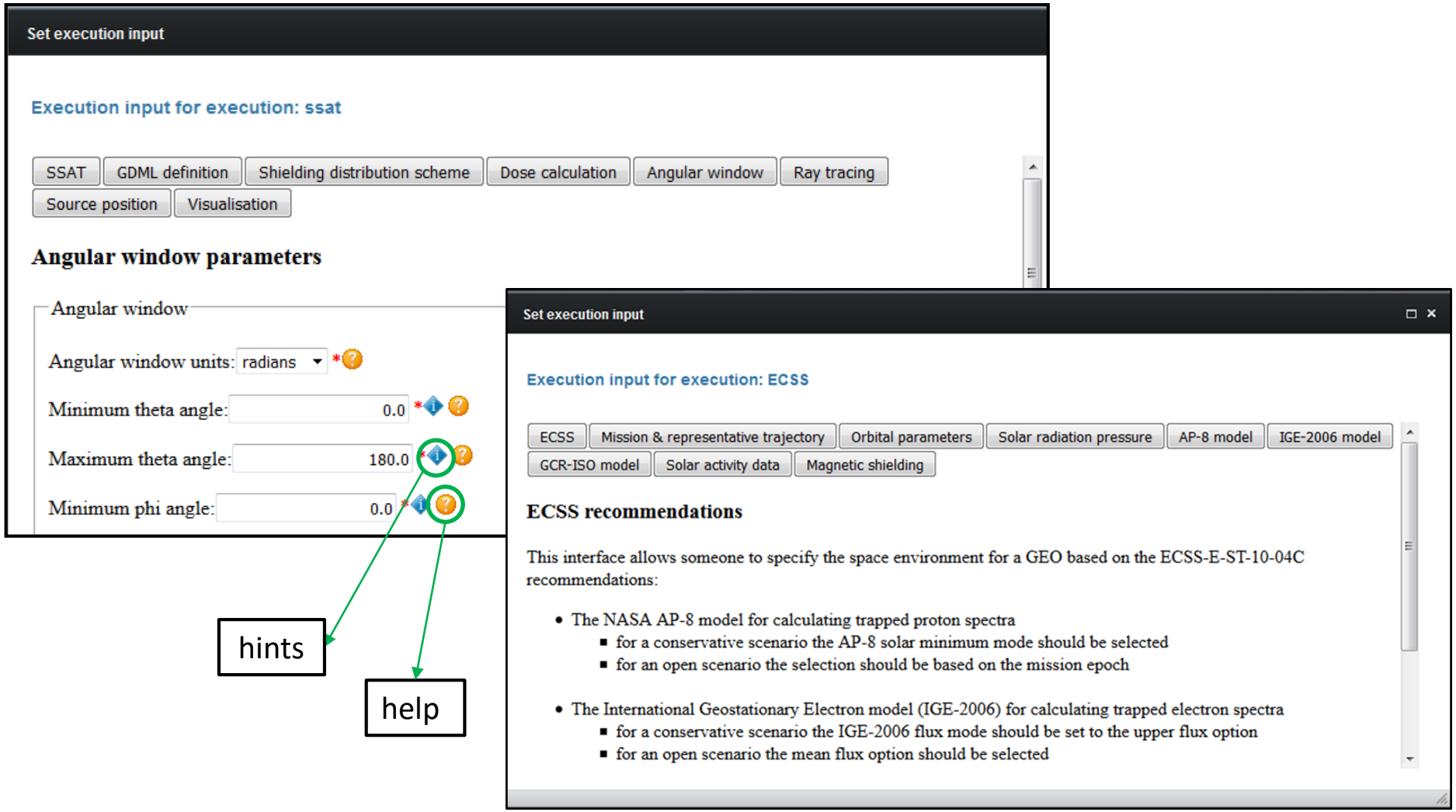

User input: atomic workflow

BELGISCH INSTITUUT VOOR RUIMTE-AERONOMIE INSTITUT D'AERONOMIE SPATIALE DE BELGIQUE BELGIAN INSTITUTE OF SPACE AERONOMY BELGISCH INSTITUUT VOOR RUIMTE-AERONOMIE INSTITUT D'AERONOMIE SPATIALE DE BELGIQUE BELGIAN INSTITUTE OF SPACE AERONOMY BELGISCH INSTITUUT VOOR RUIMTE-AERONOMIE INSTITUT D'AERO

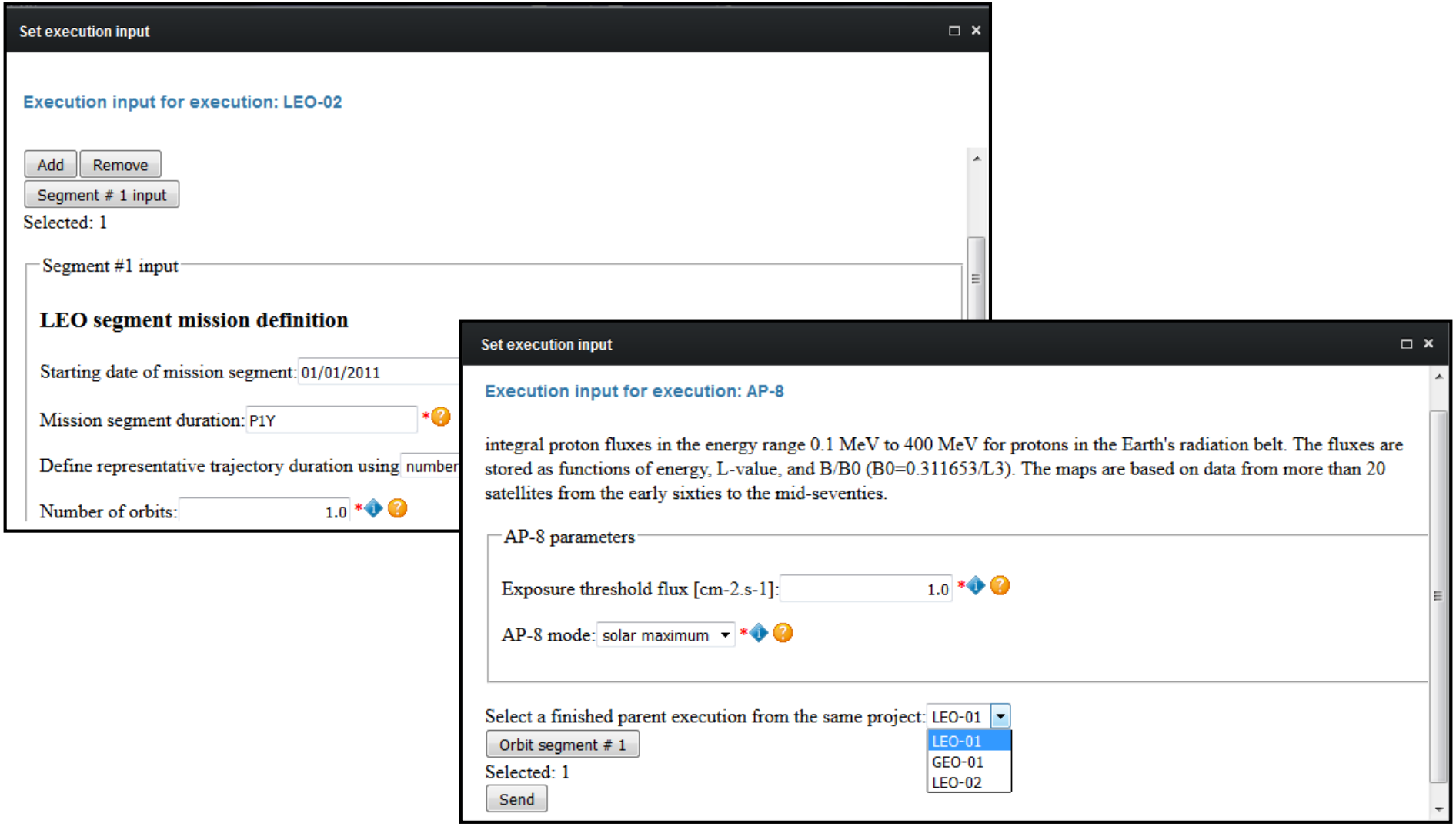

Workflow outputs

BELGISCH INSTITUUT VOOR RUIMTE-AERONOMIE INSTITUT D'AERONOMIE SPATIALE DE BELGIQUE BELGIAN INSTITUTE OF SPACE AERONOMY BELGISCH INSTITUUT VOOR RUIMTE-AERONOMIE INSTITUT D'AERONOMIE SPATIALE DE BELGIQUE BELGIAN INSTITUTE OF SPACE AERONOMY BELGISCH INSTITUUT VOOR RUIMTE-AERONOMIE INSTITUT D'AERO

PROJECT: NASA_Workshop — Project list

Workflow executions | Project history

ID	NAME	STATUS	WORKFLOW	LAST ACTION	ACTION
19,902	LEO-01	FINISHED	/common/workflows/SEG_Earth_LEO_d02	2017-09-25T11:21:27.726+02:00	Delete Duplicate VOT
19,905	GEO-01	FINISHED	/common/workflows/SEG_Earth_GEO_d02	2017-09-25T11:24:59.962+02:00	Delete Duplicate VOT
19,908	AP-8_LEO-01	FINISHED	/common/workflows/ENV_Earth_TRP_AP-8_d02	2017-09-25T11:31:44.542+02:00	Delete Duplicate VOT
19,912	AP-8_GEO-01	FINISHED	/common/workflows/ENV_Earth_TRP_AP-8_d02	2017-09-25T11:38:27.546+02:00	Delete Duplicate VOT
19,915	AE-8_GEO-01	FINISHED	/common/workflows/ENV_Earth_TRP_AE-8_d02	2017-09-25T11:58:51.797+02:00	Delete Duplicate VOT
19,916	SD2_AE-8_GEO-	WAITING_FOR_INPUTS	/common/workflows/EFF_TID_SHIELDOSE-2_TR		Delete Set input

Count: 6

Create execution | Refresh list

Models details | Inputs | Outputs | Report | Log | Plots

Mission average AE-8 electron flux spectrum

Energy	Integral flux	Differential flux
[MeV]	[cm^{-2} s^{-1}]	[cm^{-2} MeV^{-1} s^{-1}]
0.04	6.1051E8	1.071E10
0.1	1.3049E8	5.2911E9
0.2	5.2919E7	4.9974E8
0.3	3.0543E7	1.5909E8
0.4	2.1101E7	8.0172E7
0.5	1.4508E7	4.8965E7
0.6	1.1308E7	2.8471E7
0.7	8814000.0	2.1303E7

Characteristic orbit

- Orbit type: GEO
- Representative trajectory duration [days]: 1.0
- Minimum altitude [km]: 35793.23
- Maximum altitude [km]: 35793.23
- Inclination [deg]: 0.0
- Right ascension Of the ascending node [deg]: 99.73
- Argument of perigee [deg]: 0.0
- True anomaly [deg]: 75.0

AE-8 input summary

- AE-8 exposure threshold flux [cm^{-2} s^{-1}]: 1.0

Workflow plots

BELGISCH INSTITUUT VOOR RUIMTE-AERONOMIE INSTITUT D'AERONOMIE SPATIALE DE BELGIQUE BELGIAN INSTITUTE OF SPACE AERONOMY BELGISCH INSTITUUT VOOR RUIMTE-AERONOMIE INSTITUT D'AERONOMIE SPATIALE DE BELGIQUE BELGIAN INSTITUTE OF SPACE AERONOMY BELGISCH INSTITUUT VOOR RUIMTE-AERONOMIE INSTITUT D'AERO

- Plotting tool for graphical display of workflow results
  → "*SPENVIS-NG Generic Plots*" (v1.0, June 2015)

- Various plot options
  - ✓ simple plots of various types e.g. scatter, histogram, contour etc.
  - ✓ stacked plots (up to 5 scatter plots)
  - ✓ Interactive 3D plots

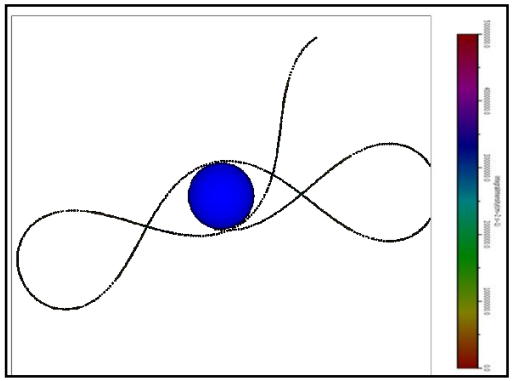

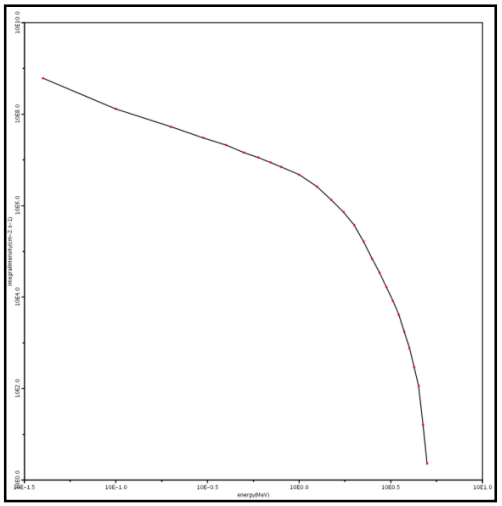

Special users

- User administrator
- Model administrator
  - ✓ register new bundles and nodes
  - ✓ manage public workflows
- HMI documentation: "*Human Machine Interface User Manual*" (v1.2, March 2017)

Machine-Machine Interfaces

Application Programming Interface

- SPENVIS-NG Application Programming Interface (SAPI) tool for **end users**, written in Python (works with v2.6+)
- Agnostic wrapper for calling any operation of available web services
- It requires: 1) registered user, 2) existing project & 3) existing workflow
- Documentation: "*Python API User Manual*" (v1.1 February 2016)

Calling SAPI from command line

BELGISCH INSTITUUT VOOR RUIMTE-AERONOMIE INSTITUT D'AERONOMIE SPATIALE DE BELGIQUE BELGIAN INSTITUTE OF SPACE AERONOMY BELGISCH INSTITUUT VOOR RUIMTE-AERONOMIE INSTITUT D'AERONOMIE SPATIALE DE BELGIQUE BELGIAN INSTITUTE OF SPACE AERONOMY BELGISCH INSTITUUT VOOR RUIMTE-AERONOMIE INSTITUT D'AERO

- Using INI-style configuration files (global & session)
- Simple cases

```
["Spenvis"]
ns = "spenvis“
mainurl = "http://www.spenvis.oma.be"

["Server"]
baseURL = "https://test.spenvis-ng.eu/"

["User"]
username = “MY_USERNAME“
password = “MY_PASSWORD“
webservice = "SecureTokenServiceService“
webservicefile = "SecureTokenService?wsdl“

["Options"]
autodiscovery = False
```

```
> python sapi.py --globalconfig
myglobaltest.conf --sessionconfig
mysessiontest.conf  mysessiontest.conf
```

Using SAPI as Python library

- Recommended method
  - ✓ complex operations
  - ✓ wish to process the results
  - ✓ input depends on other parameters
- Necessary to load global configuration file and log in the system before calling any web services

```
import sapi

s = sapi.Session("global.conf","")
s.readConfig()
ssn = s.login()
```

Run model using the SDK

- Dedicated tool for **model developers** to run model on remote execution node without using a workflow
- Model bundle must be installed on execution node

```
> java -jar Development/Bin/spenvis-sdk-500.jar -u
https://spng-re-test:XXXX
-x spenvis://estec.esa.int/spenvis4/trepAP8/2956 -v
../trepAP8-467-bundle/TestSuite/test0001/input/

Execution request for bundle
spenvis://estec.esa.int/spenvis4/trepAP8/2956 on:
https://spng-re-test:XXX
VOTable: input-vo-table.vot
Execution id: 120
```

Run model using own script

- Script to drive execution of a SPENVIS-NG model using exposed web services
- Requires
  - ✓ access to execution node
  - ✓ installation of model bundle

Recent developments

Recent developments

- Coupling SPENVIS-4.6.10 & SPENVIS-NG
  - ✓ SPENVIS-4 contains scripts to drive execution of models on SPENVIS-NG remote node
  - ✓ Used for IRENE v1.50, GRAS v4.0 and MULASSIS v1.26

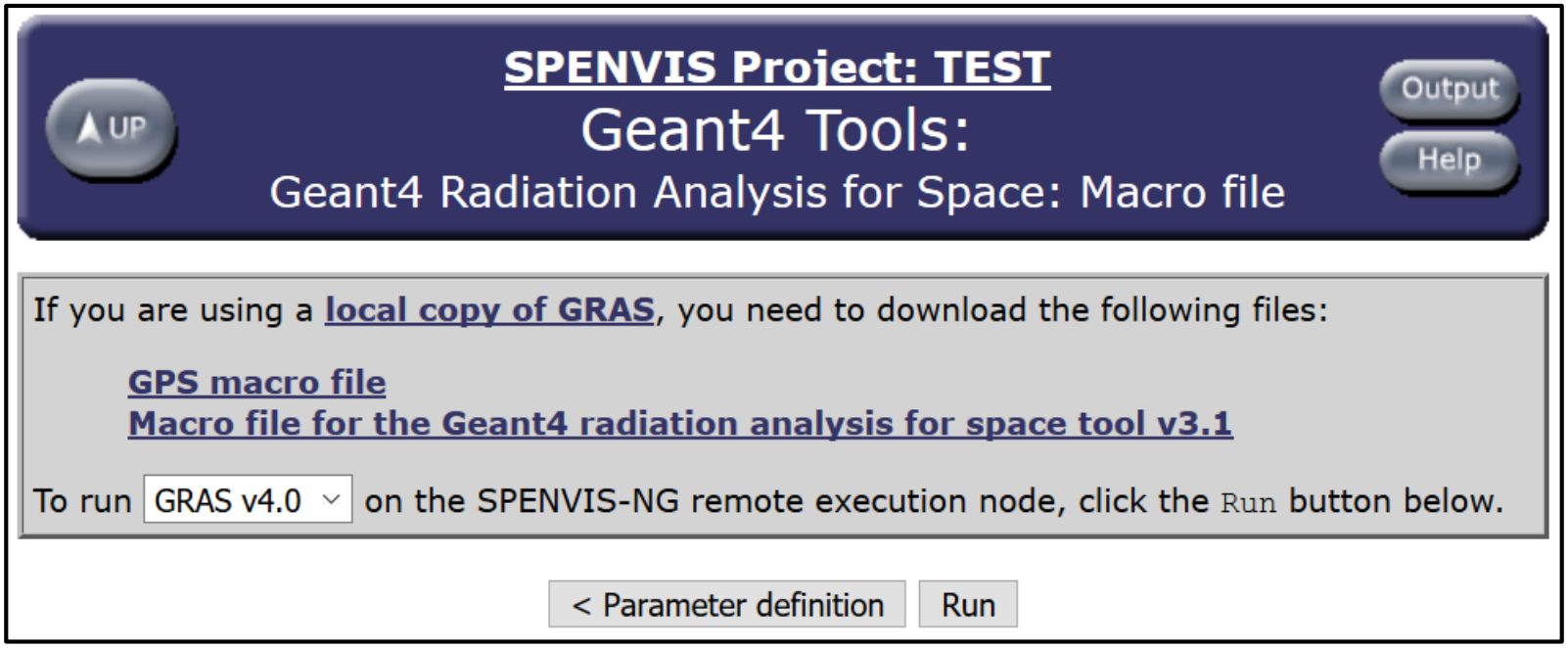

Recent developments

- Collaboration with NASA's Community Coordinated Modeling Center (CCMC)
  - ✓ Remote automated SPENVIS-NG executions, using real-time environmental conditions from CCMC model output
  - ✓ Proof of concept: Using SAPI to drive executions of DICTAT on remote node installed at BIRA to study internal charging effects onboard GOES-13

- Installation of complete SPENVIS-NG system at ESTEC

Closing remarks

- Selected group of test users have provided feedback on alpha release of SPENVIS-NG
- At this point, system not mature enough to migrate SPENVIS-4 users
- Future development to improve system → SPENVIS-NG team made some recommendations to ESA
- Milestone Review Meeting MS.4 → 28 June 2018, ESTEC

BIRA•IASB 1964•2014

BELGISCH INSTITUUT VOOR RUIMTE-AERONOMIE INSTITUT D'AERONOMIE SPATIALE DE BELGIQUE BELGIAN INSTITUTE OF SPACE AERONOMY BELGISCH INSTITUUT VOOR RUIMTE-AERONOMIE INSTITUT D'AERONOMIE SPATIALE DE BELGIQUE BELGIAN INSTITUTE OF SPACE AERONOMY BELGISCH INSTITUUT VOOR RUIMTE-AERONOMIE INSTITUT D'AERO

Thank you for your attention!

More information: www.spenvis-ng.eu

Contact: neophytos@aeronomie.be or stijn.calders@aeronomie.be