IOS/ REFUELLING DESIGN AND DEVELOPMENT ACTIVITIES AT THALES ALENIA SPACE UK

CleanSpace Industry Days

Sebastian Hill – Propulsion Systems Engineer
Contact : sebastian.hill@thalesaleniaspace.com

ThalesAlenia Space
a Thales / Leonardo company

Company overview and Propulsion Centre

TASUK and In Orbit Services- Key Projects and Studies at TASUK

TASUK Future IOS Perspectives & Challenges

Conclusion

Q/A

TAS-UK INTRODUCTION (1/2)

Summary

/// Bristol – Main Office (~120 employees) → System Prime activities

- Scientific, Observation and Exploration studies. R&D in space flight electronics and remote sensing instruments. Technology demonstrators. Systems integration.
- 116 m² IS0-8 clean room with a new ISO-5 cleanroom to facilitate optics integration

/// Harwell (~100 employees) → Propulsion Centre of Excellence & System AIT

- Design authority for Propulsion systems. Platform and satellite subsystems AIT. Mechanisms including Electronic Ground Support Equipment, Harness & Thermal Hardware
- In 2023, we will move to a permanent office on Harwell campus with a clean room facility >400m² (BEP0) from 2023

/// Belfast (~20 employees) → AIT

- Assembly, Integration of Chemical and Electric Propulsion systems
- 550m² clean room situated within the Thales Belfast facility

/// Glasgow (Thales UK facility) → AIT

- Manufacture of Optical Inter-satellite link hardware for Telesat constellation

TAS UK INTRODUCTION (2/2)

/// Centre of Excellence for Propulsion & Refuelling Systems of TAS Group

- Chemical Propulsion, Electric Propulsion & Refuelling
- Solutions for all market sectors

/// Spacebus NEO and Space Inspire Electric Propulsion, for orbit raising and station-keeping on GEO satellites

- First delivery for Spacebus Neo in Oct 2018; 4 launched, 4 more in production
- Strong pipeline contracted for Space Inspire starting production in 2023

/// Baseline Electric Propulsion for Telesat Lightspeed constellation, plus other prospects

/// Strong Chemical Propulsion activities

- Mono propellant : EXOMARS 2020 RCS delivered. Flex and Microcarb currently in production.
- Bi propellant : Development underway for ESPRIT-refuelling, prospects including for ESA exploration missions

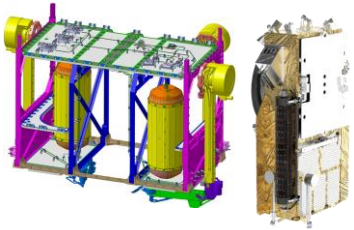

ThalesAlenia Space
a Thales / Leonardo company

TASUK PROJECTS –ESPRIT

ESPRIT Refuelling Module

/// Summary: TASUK Leads the design and development of the bipropellant transfer subsystem, which facilitates the refuelling of the Lunar Gateway chemical propulsion system

/// Design Drivers & Challenges:

- Designing for human spaceflight
- Transfer of large amount of propellant (1200kg over life)
- Flow and tank pressure control capability between elements
- Leak checking, Purging and venting of bipropellant

/// Key Capabilities Developed and Benefits for IOSM:

- Bipropellant refuelling capability and CONOPs design
- Components for flow control
- Subsystem pressure regulation
- Fluidic Breadboarding and Derisking (see next)

/// Applicability to future missions:

- Shapes refuelling requirements for future Gateway refuelling missions
- Developing technologies applicable to GEO and others biprop platforms

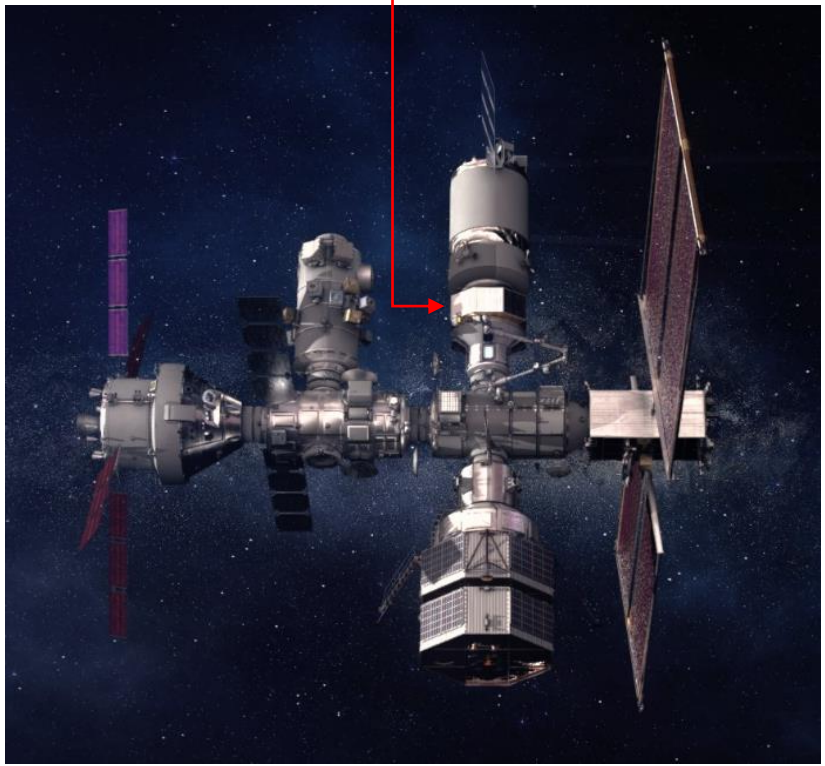

Gateway with ESPRIT
Credit: NASA

11/10/2022
ESP-PG-TUK-BTS-0004

TASUK PROJECTS -ESPRIT

ESPRIT RM BTS Fluidic Breadboard

/// Summary: Joint Gateway chemical refuelling system breadboard to derisk and characterise major operations with

/// Design Drivers & Challenges:

- Inter-agency and company Interfaces to achieve verification goals
- Intrumentation for accurately quantifying transient operations
- Maintainance of realistic vacuum conditions for priming

/// Key Capabilities Developed and Benefits for IOSM:

- Fluidic refuelling breadboarding capability specifically for the refuelling and propulsion context in house at TASUK
- Operations planning and rehearsal

/// Applicability to future missions:

- Any CP or EP mission that may need subsystem level breadboarding (not involving thruster firing)

Joint TAS-NASA Breadboards

ThalesAlenia Space

a Thales / Leonardo company

TASUK PROJECTS – LEO CP REFUELLING

Horizon 2020 EROSS+ Mission / UKSA Astroscale COSMIC / ESA IOSM

/// Summary: TASUK Contributes to multiple commercial and institutional projects and studies for LEO refuelling systems managing hydrazine monopropellant.

/// Design Drivers & Challenges:

- Hydrazine transfer between servicer and client
- Ullage management and active transfer
- Leak check of a coupling on orbit

/// Key Capabilities Developed and Benefits for IOSM:

- Monopropellant CP refuelling subsystem design
- Coupling technology development

/// Applicability to future missions:

- Demo mission provides derisking for many RDV and refuelling functions
- Future LEO service missions

EROSS +Credit: EU/ H2020

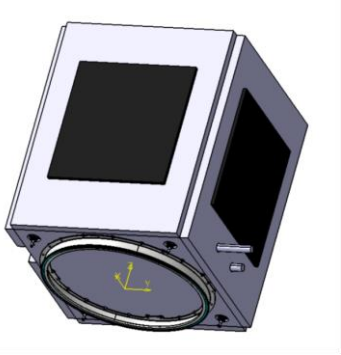

Refuelling SC concept

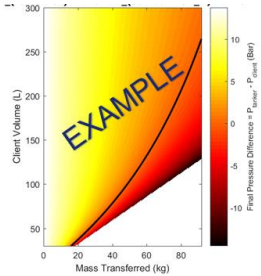

Blowdown transfer performance example

11/10/2022
ESP-PG-TUK-BTS-0004

ThalesAlenia Space
a Thales / Leonardo company

TASUK PROJECTS – ESA TDE STUDIES

Pump Architecture / Prototyping Spacecraft Refuelling

/// Summary:

- TASUK is involved in ESA consortium studies to investigate refuelling concepts

/// Major Activities

- Wide design scope trade-off and design studies
- Investigation of pump technology
- Investigation of fluid behaviour and prototyping

/// Key Capabilities Developed and Benefits for IOSM:

- Pumped architectures developed are already compelling for propulsion, shown to be very valuable for reusable / refuellable architectures
- Understanding of critical refuelling operations

/// Applicability to future missions:

- Future refuelling architectures for CP will benefit from this form of active pressurisation

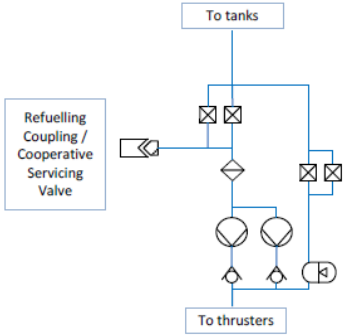

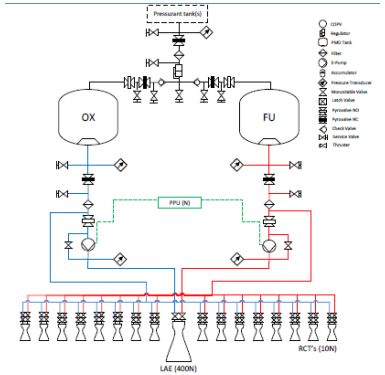

Pump Architecture Investigation Examples

TASUK PROJECTS – LOOKING AHEAD

Future Opportunities

/// Zero Debris Platform and associated developments

- The Zero Debris Platform initiative will provide a path to many enabling technologies for space sustainability, as well as IOSM

/// Commercial Servicing Missions

- TASUK is working with start ups and scale ups to be part of the new IOSM landscape

/// Institutional Servicing Missions

- TASUK ambition to play a key role in future servicing missions in demonstrations and science/exploration missions beyond ESPRIT

/// Collaboration with equipment suppliers

- Independent development activities for enabling technologies

/// Collaboration with Academia

- TASUK is looking to support research in IOSM through various institutions
- Already supported a masters thesis in EP refuelling

TASUK FUTURE IOSM PERSPECTIVE

IOS Ecosystem for TASUK

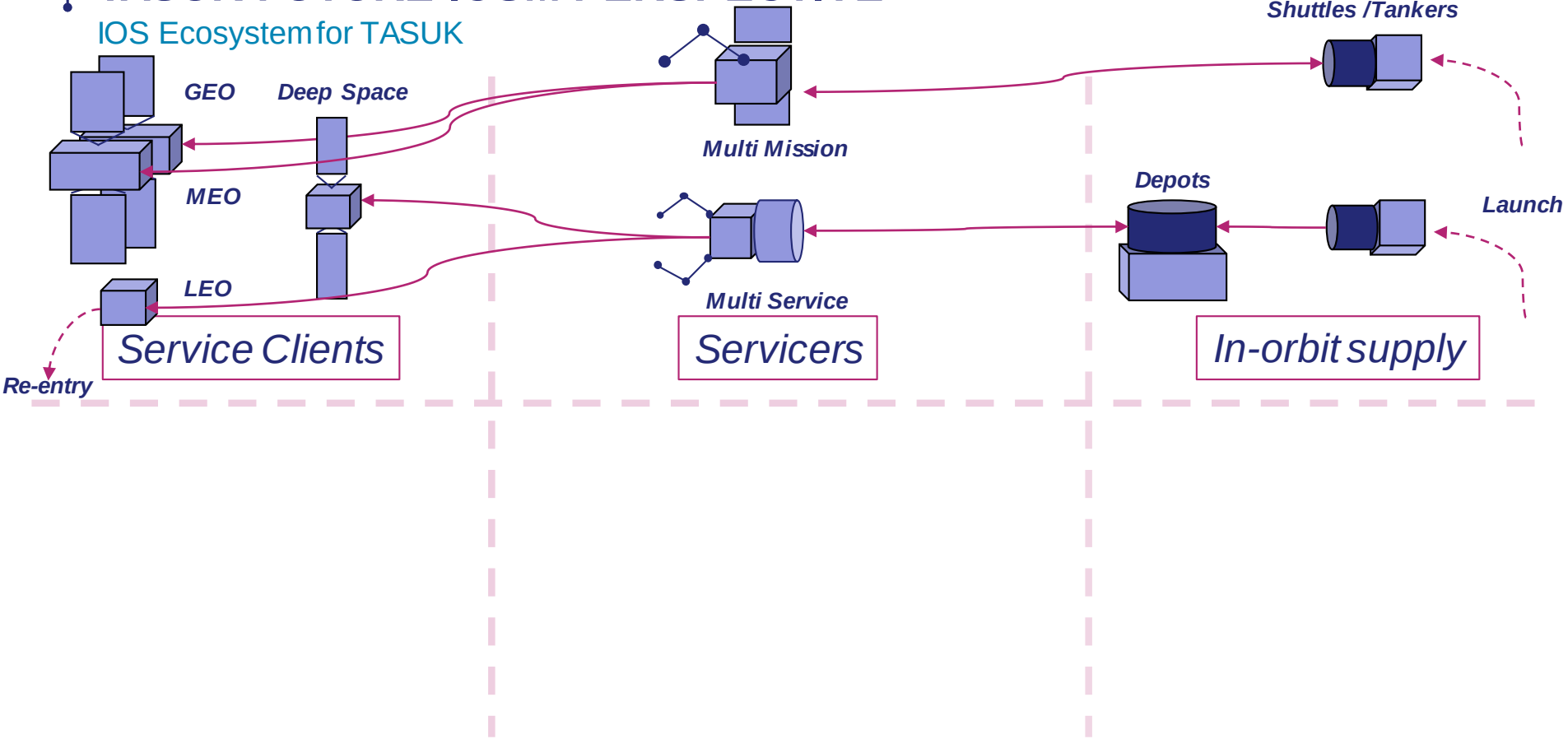

ThalesAlenia Space
a Thales / Leonardo company

FUTURE IOSM PERSPECTIVES

IOS Ecosystem for TASUK (1/3)

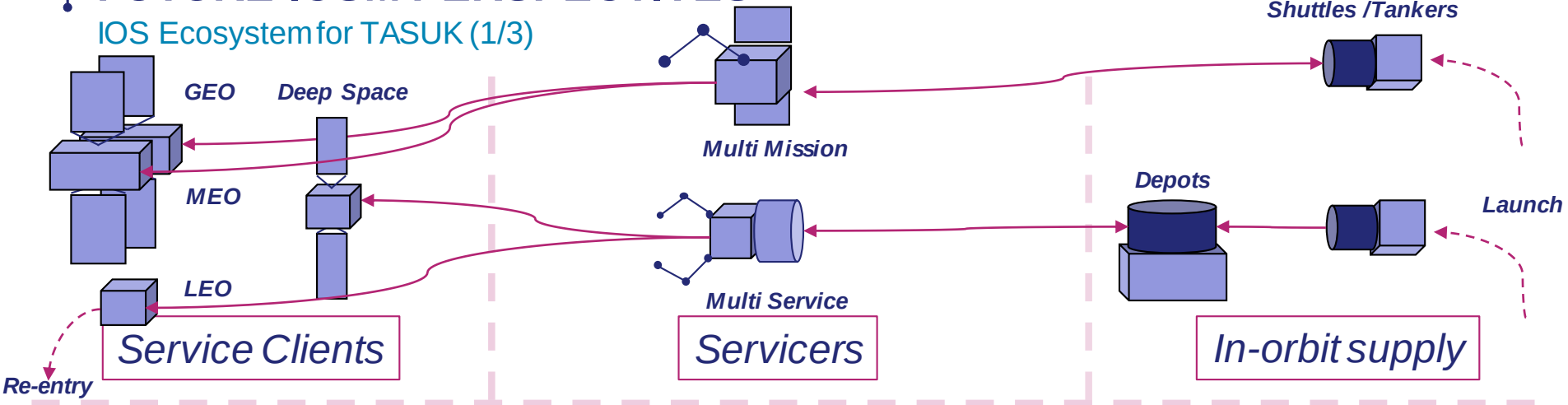

Develop current propulsion products to support servicing + refuelling

Design for EOL demisability or EOL services

Delta develop propulsion system for higher lifetime capability

ThalesAlenia Space

a Thales / Leonardo company

FUTURE IOSM PERSPECTIVES

IOS Ecosystem for TASUK (2/3)

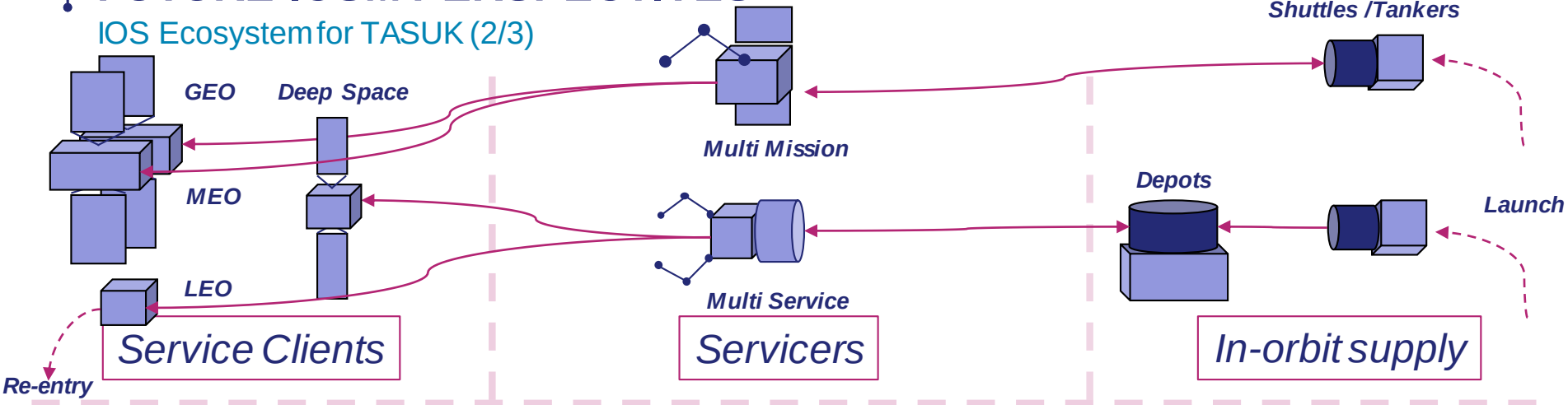

Develop current propulsion products to support servicing + refuelling

Design for EOL demisability or EOL services

Identify and implement platform advantages with IOSM (eg: launch with only half Fuel/ replaceable parts)

Develop highly capable servicing subsystems for active refuelling CP and EP, supporting mechanisms and system interfaces

Delta develop propulsion system for higher lifetime capability

FUTURE IOSM PERSPECTIVES

IOS Ecosystem for TASUK (3/3)

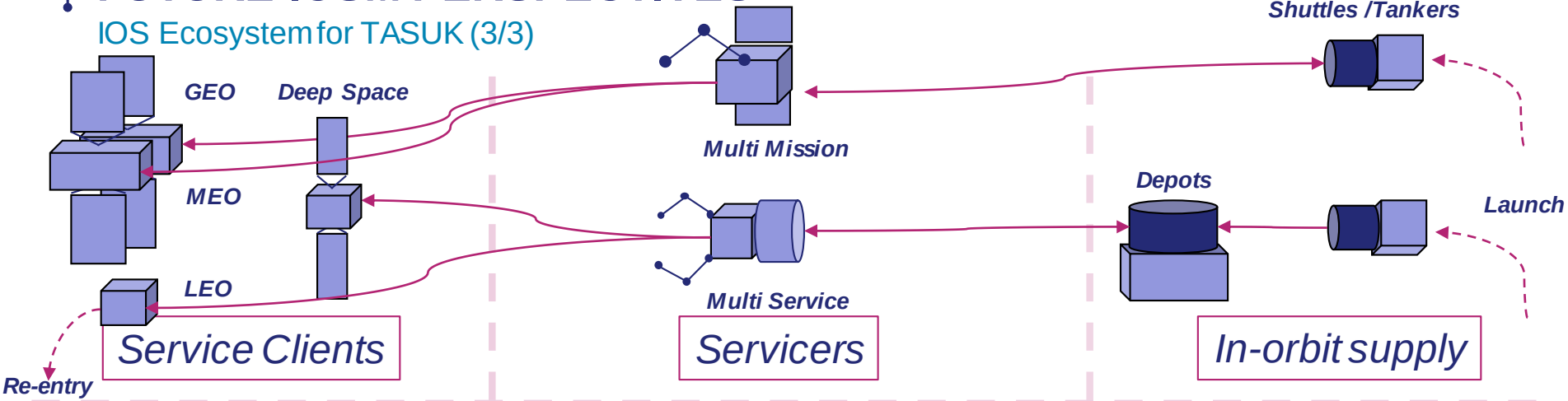

Develop current propulsion products to support servicing + refuelling

Design for EOL demisability or EOL services

Identify and implement platform advantages with IOSM (eg: launch with only half Fuel/ replaceable parts)

Develop highly capable servicing subsystems for active refuelling CP and EP, supporting mechanisms and system interfaces

Delta develop propulsion system for higher lifetime capability

Determine interface requirements and best case system architecture for in orbit supply to servicers (parts and propellant)

Support development of ubiquitous in orbit supply chain to enable commercial viable IOSM through industrial partnerships

Ensure TASUK compliance with clean space regulation policy and support standardised, high quality and flexible interfaces to enable services

FUTURE IOSM PERSPECTIVES

/// Key Challenges and Opportunities

/// Standardisation

- In interfaces
  - Open question of where to implement standardisation and where to be agnostic to diversity
- In system design (eg propellants)

/// Technology development requirements

- Serviceable and servicing systems
  - Servicing platforms need to provide active pressurisation capabilities to achieve low residuals (eg pumps/ compressors)
  - Clients who are serviced may need to qualify for extra cycles
- High performance/ capability systems
  - Multi- mission CONOPs may require high delta-V's, therefore high Isp a benefit (usually a sacrifice for manoeuvre time)
  - Systems for RdV also require high thrust with many actuators for agility
  - Systems providing ADR of large non-demisable systems require high thrust

CONCLUSION

Main Take-Aways

/// TAS-UK is proud to work on innovative projects with a range of institutional and commercial partners, contributing to highly capable servicing solutions

/// We are driving key technological developments in refuelling for a variety of orbits and servicing mission cases

/// We are looking to foster development of compelling European solutions for the future IOSM market

/// We are open to collaborate with new suppliers on future Clean space propulsion/refuelling technologies (ESATDE, UKSA CEOI projects etc…)

ThalesAlenia Space

a Thales / Leonardo company

THANKS FOR LISTENING!

ThalesAlenia Space
a Thales / Leonardo company

Q/A

ThalesAlenia Space
a Thales / Leonardo company