Kayser-Threde GmbH

Space

Industrial Applications

e.Deorbit Mission Phase A

Baseline Concepts of the Kayser-Threde Team

6 May 2014, Conference Centre Leeuwenhorst , The Netherlands

An OHB Company

Agenda

Introduction

Target Definition

Capture Technologies

Mission Option Trade-Offs

Baseline Concepts

Summary

Agenda

Introduction

Target Definition

Capture Technologies

Mission Option Trade-Offs

Baseline Concepts

Summary

Introduction

The e.Deorbit Mission Objective:

- Remove a single large ESA-owned Space Debris from the LEO protected zone.
- Chaser that is launched by a small or medium launcher
- Perform a rendezvous with the ESA-owned debris (target)

Main Tasks:

- Target selection and study of orbit and attitude
- Trade-off for capture as well as ADR mission options
- Establish a baseline for 3 mission option
- System level assessment for each baselines
- Cost estimate for each baseline
- System level trade-off between selected baselines
- Proposal of preferred baseline + alternatives

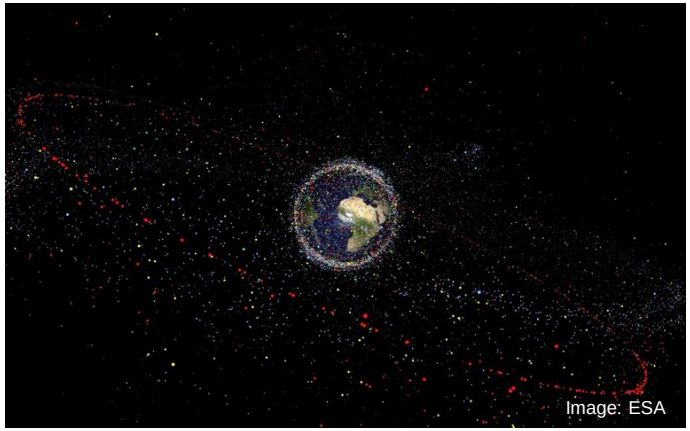

Consortium

Kayser-Threde (D)
Prime Contractor

- Study Management
- Systems Engineering
- Target Selection
- Capture Sensors & Mechanisms Trade-Offs
- System Level Trade-Offs & Cost Estimate

OHB System AG(D) *

- Platform Design
- Mission Analysis

OHB Sweden (S)

- GNC Design

DSTA – Poli Mi (I)

- Flexible Capture System Design

DLR-RMC (D)

- Rigid Capture System Design

Consultancy

Neptec (CND)

- Lidar Technologies

Lavochkin (RUS)

- Fregat-based System Design

Sierra Nevada (US)

- DreamChaser© usability support

Approach for Baseline Definition

Objective of Task-1:
Define baselines for the three mission options to be further investigated during e.Deorbit study:

Option 1:
Flexible connection to the target
End of mission disposal:
stack controlled re-entry

Option 2:
Rigid connection to the target
End of mission disposal:
stack controlled re-entry

Option 3:
Rigid, flexible or force transmission
End of mission disposal:
stack re-orbiting
outside the LEO protected region

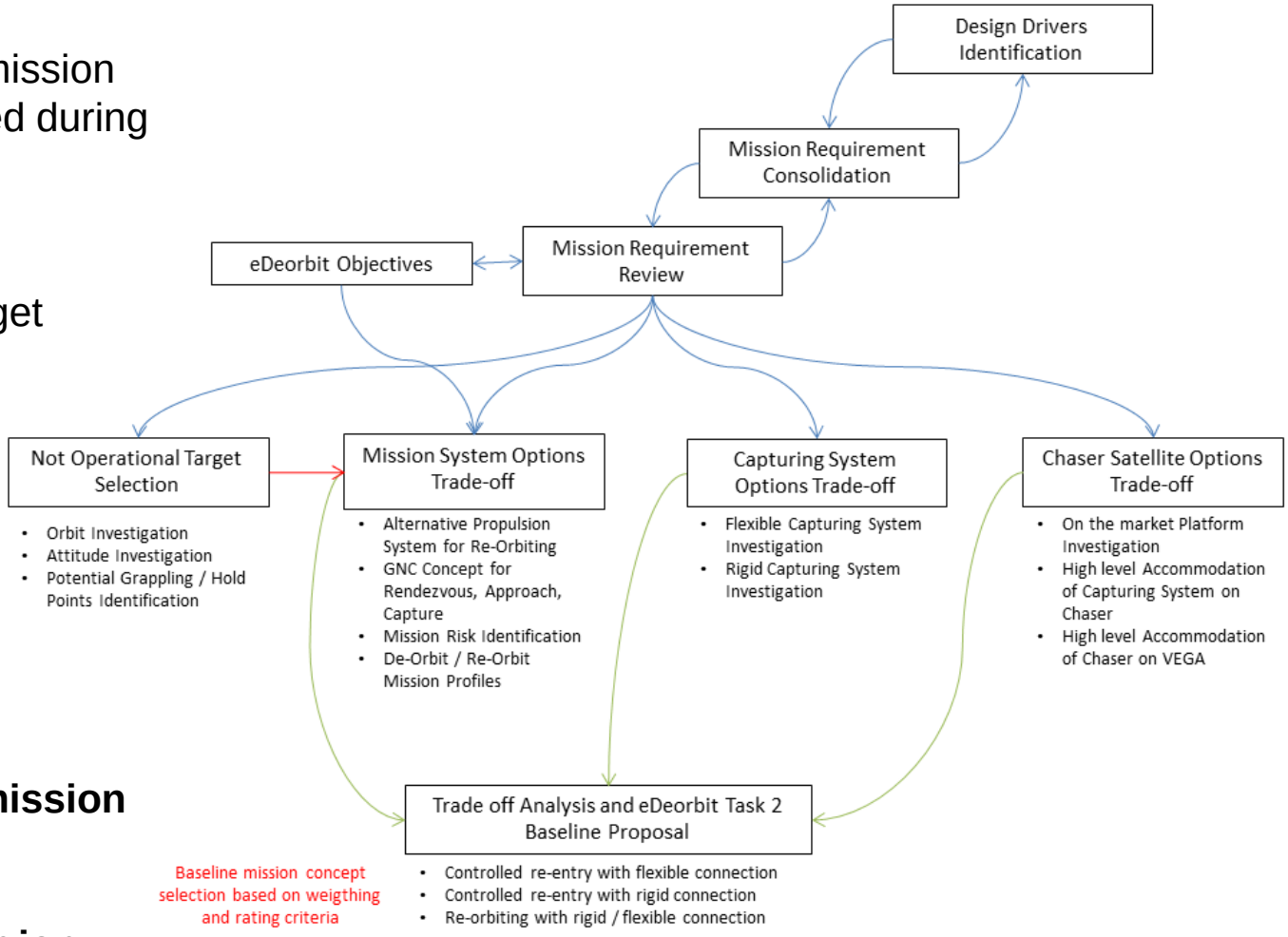

Major Design Drivers

- Presently high rotation rate of Envisat and uncertainty about attitude evolution
- Stiffness of solar array yoke
  → Accessibility of Envisat launch adapter
- Launch mass requirement driven by Vega
- Stabilization of the stack
  → High momentum represented by the current Envisat attitude state
- Contact durations to ground segment for proximity operations


Image: ESA


Image: ESA

Agenda

Introduction

Target Definition

Capture Technologies

Mission Option Trade-Offs

Baseline Concepts

Summary

Target Definition

Requirements:

- ESA ownership
- Non-operational satellite
- LEO region
- Heavier than 4 tonnes

→ **Envisat**

Spacecraft Parameters:

- Dimensions
- Mass properties
- Grabbing Points
- Seating Areas
- Status:
  Power, Propulsion, AOCS
- Orbit & Attitude prediction

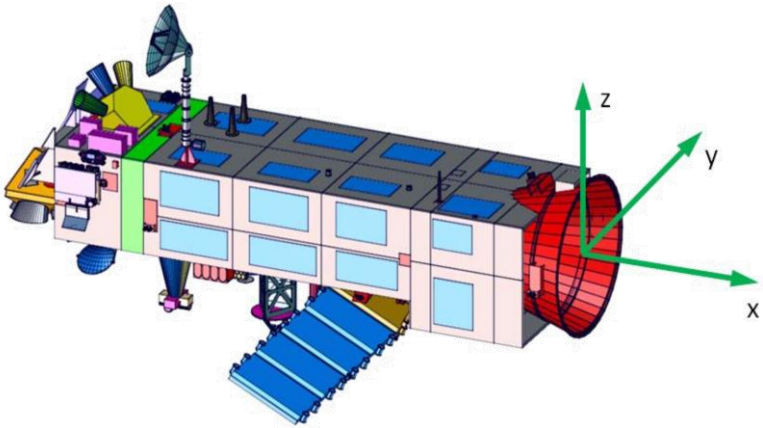

Orbital Parameter	Current Value
Semi-major Axis	7141 km
Perigee Altitude	753 km
Apogee Altitude	773 km
Eccentricity	0.001
Inclination	98.4°


Image: ESA

Possible Grasp Points

- Launch Adapter (Baseline)
- Hoisting points
- Solar Generator Launch Locks
- Solar Generator Boom

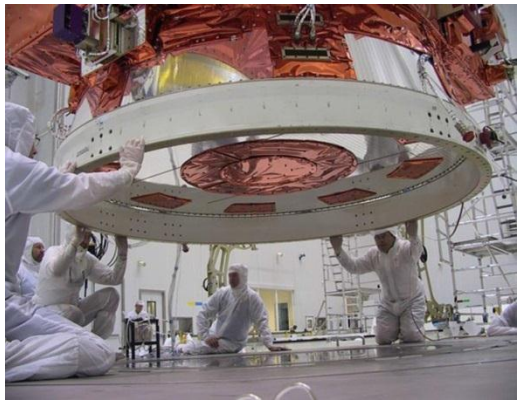

Solar Panel Joints

- Solar generator has three joints (roll-pitch-pitch)
- Solar generator is currently obstructing access to the launch adapter
- Joints might be locked
  → Panel relocation via joints maybe not possible
- A cutter tool may be an option to cut and relocate boom with panel, keep holding to it

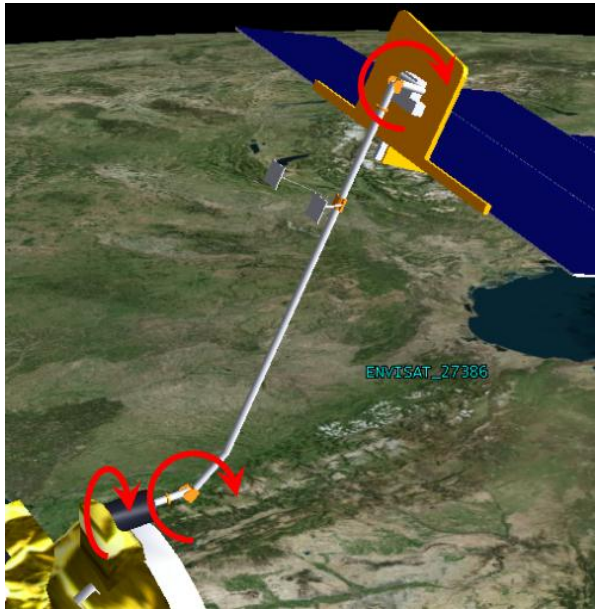

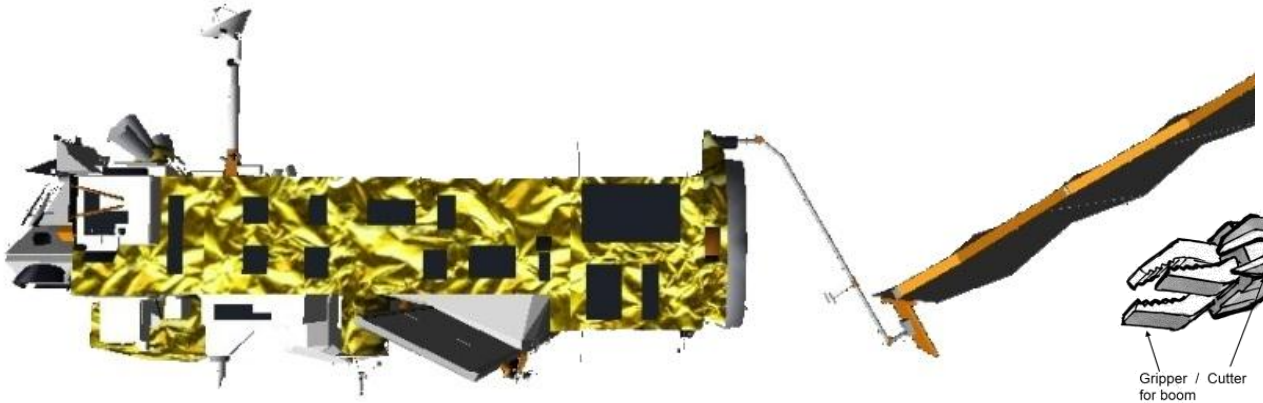

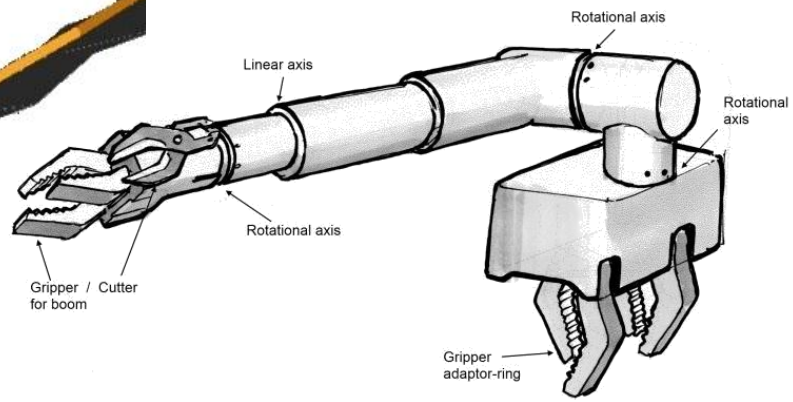

Target Definition

Orbit prediction for 2021 :

- Propagation of Envisat orbit starting from current orbit till 2022
- Extended Eclipse duration in 07/2021

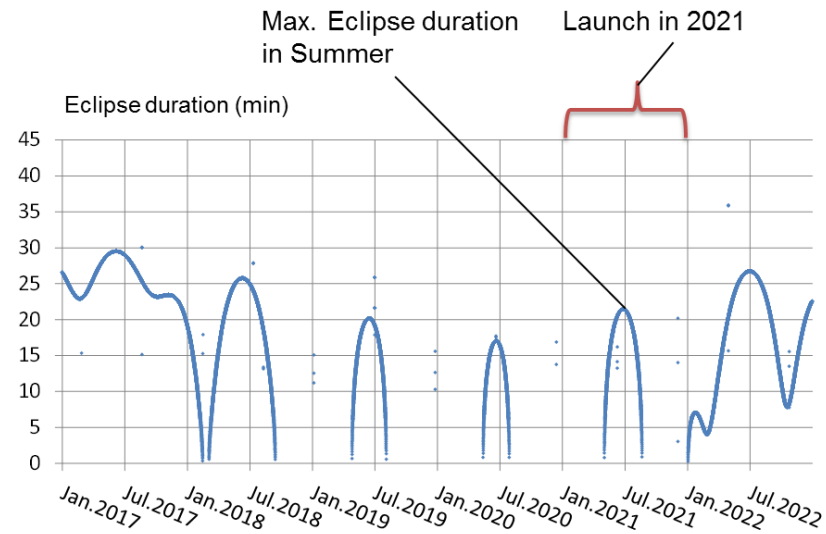

Attitude prediction

- Problem:
  consistency, understanding of past evolution.
- High uncertainty in prediction

→ Three spinning attitudes defined as sizing cases

	Spin Reference Axes	Spin Rate [°/s]	Angle between Spin axes and reference axes [°]	Precession Rate Rotation of Spin Axes around Orbit AngMom axes [°/s]	Angular Rate Magnitude [°/s]
AC-1		5.0	0	0.15	>5
AC-2	Orbit Angular Momentum	5.0	45	0.15	>5
AC-3		5.0	90	0.15	>5

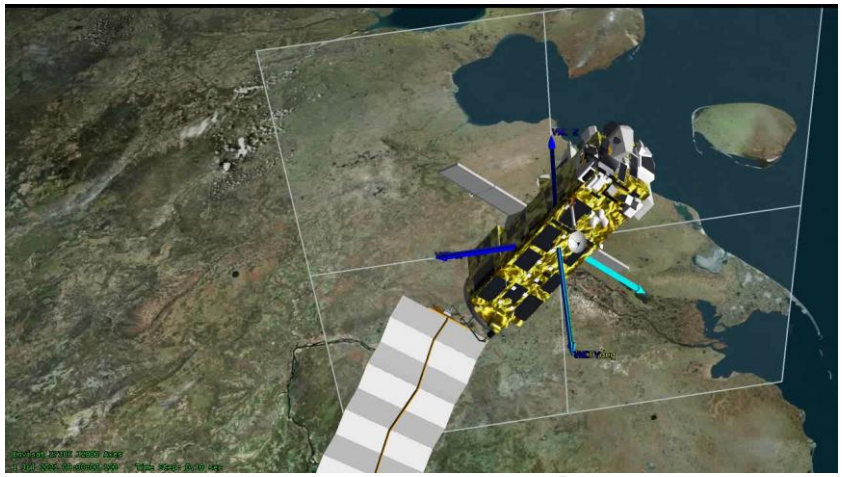

Target Definition

Orbit prediction for 2021 :

- Propagation of Envisat orbit starting from current orbit till 2022
- Extended Eclipse duration in 07/2021

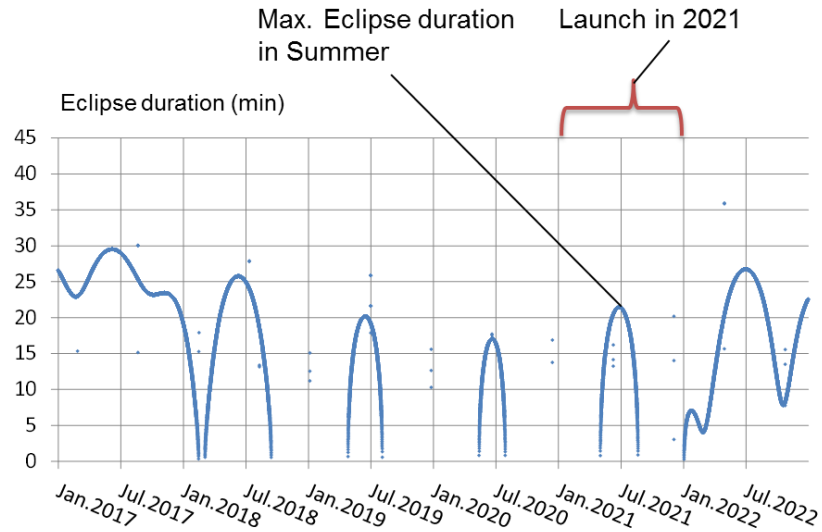

Attitude prediction

- Problem:
  consistency, understanding of past evolution.
- High uncertainty in prediction

→ Three spinning attitudes defined as sizing cases

	Spin Reference Axes	Spin Rate [°/s]	Angle between Spin axes and reference axes [°]	Precession Rate Rotation of Spin Axes around Orbit AngMom axes [°/s]	Angular Rate Magnitude [°/s]
AC-1		5.0	0	0.15	>5
AC-2	Orbit Angular Momentum	5.0	45	0.15	>5
AC-3		5.0	90	0.15	>5

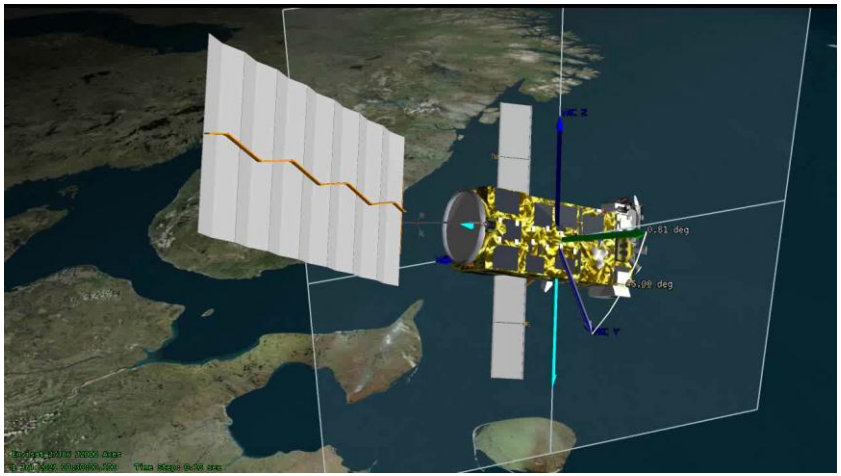

Target Definition

Orbit prediction for 2021 :

- Propagation of Envisat orbit starting from current orbit till 2022
- Extended Eclipse duration in 07/2021

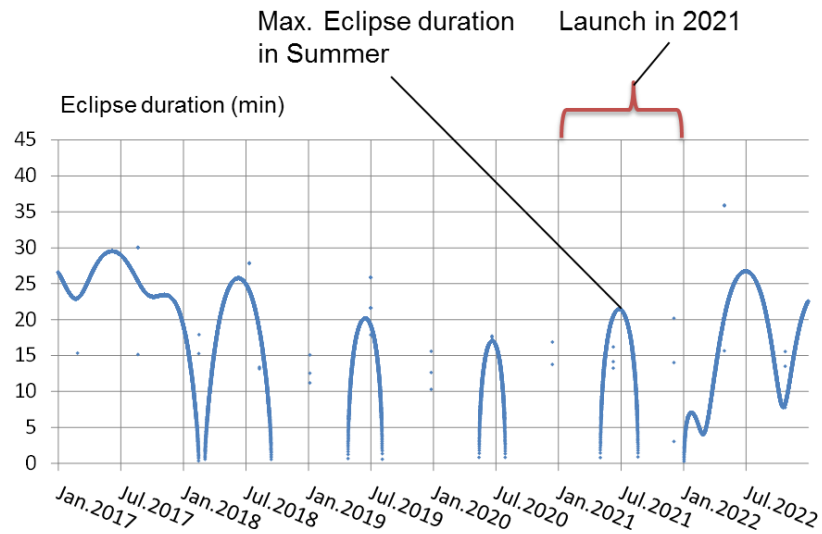

Attitude prediction

- Problem:
  consistency, understanding of past evolution.
- High uncertainty in prediction

→ Three spinning attitudes defined as sizing cases

	Spin Reference Axes	Spin Rate [°/s]	Angle between Spin axes and reference axes [°]	Precession Rate Rotation of Spin Axes around Orbit AngMom axes [°/s]	Angular Rate Magnitude [°/s]
AC-1	Orbit Angular Momentum	5.0	0	0.15	>5
AC-2		5.0	45	0.15	>5
AC-3		5.0	90	0.15	>5

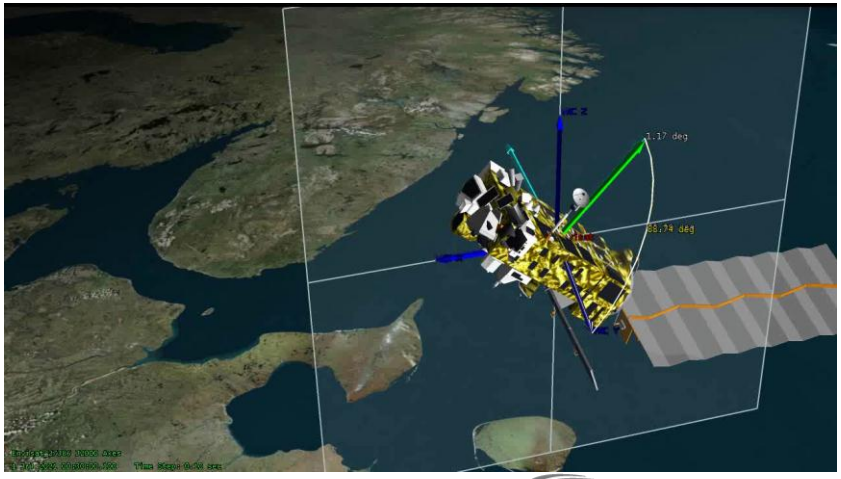

Agenda

Introduction

Target Definition

Capture Technologies

Mission Option Trade-Offs

Baseline Concepts

Summary

Possible Capture Technologies

Flexible Capture

- Net
- Harpoon
- Rope/Belt
- Wrapping,...

Rigid Capture

- Arms
- Docking Mechanisms
- Tentacles,…

Re-orbit Systems

- Solar Sail
- Ion-Beam Shepherd,…

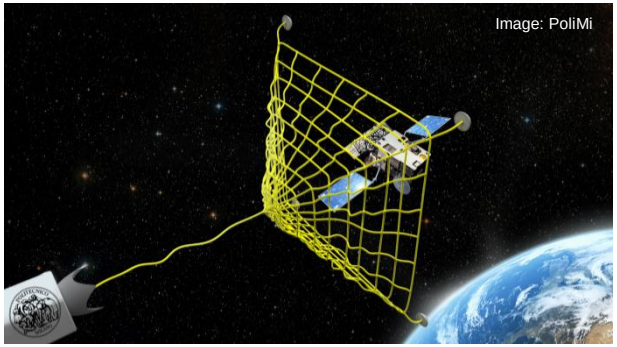
Image: PoliMi


Image: Airbus DS

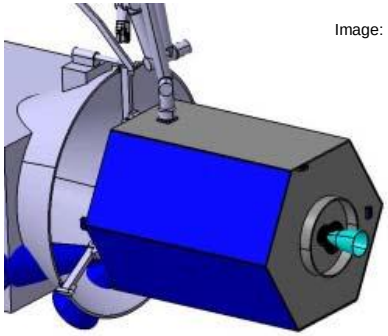
Image: KT

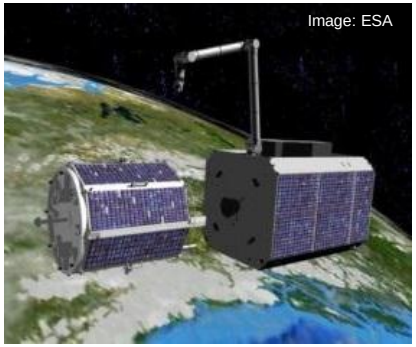
Image: ESA

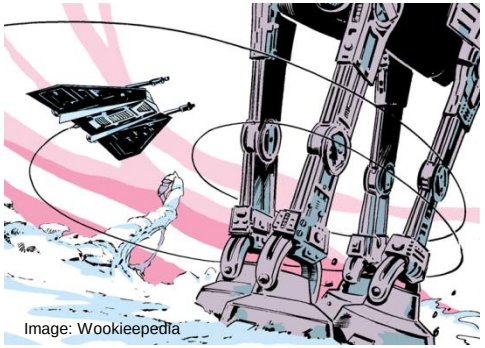
Image: Wookieepedia


Image: ESA

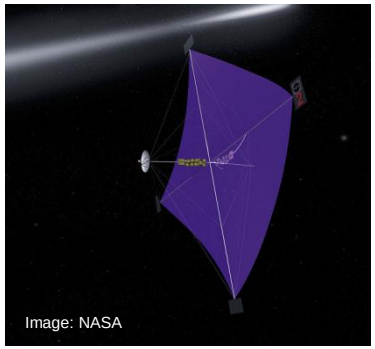
Image: NASA

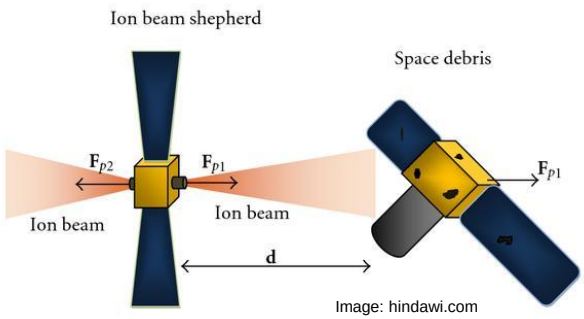

Image: hindawi.com

Concepts for Option 1
Flexible Capture

Concept Flexible-1: Net Capture

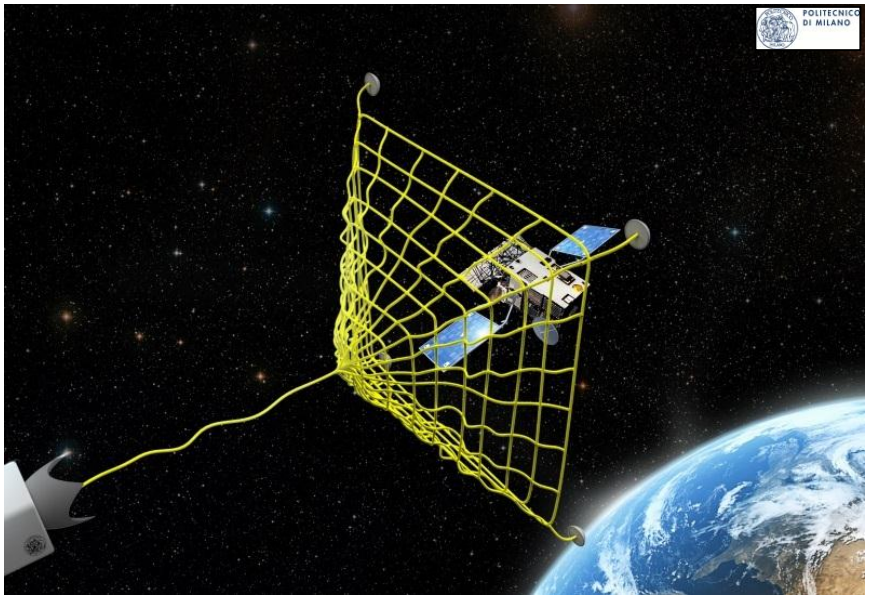

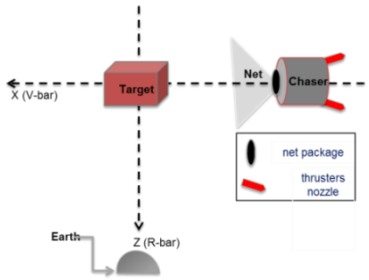

Capture: along V-bar

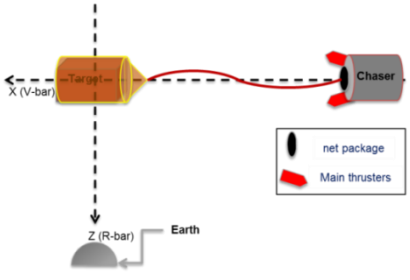

Disposal: along V-bar

Concept Flexible-2: Harpoon Capture

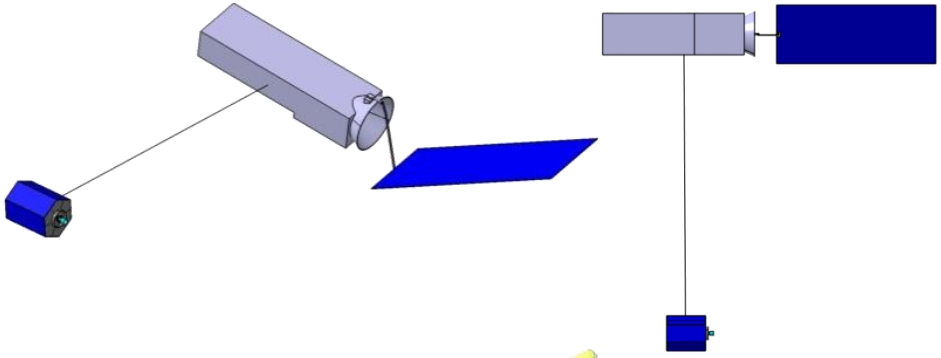

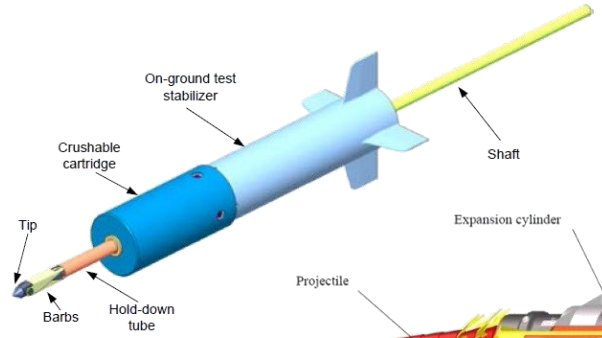

Image: Airbus DS

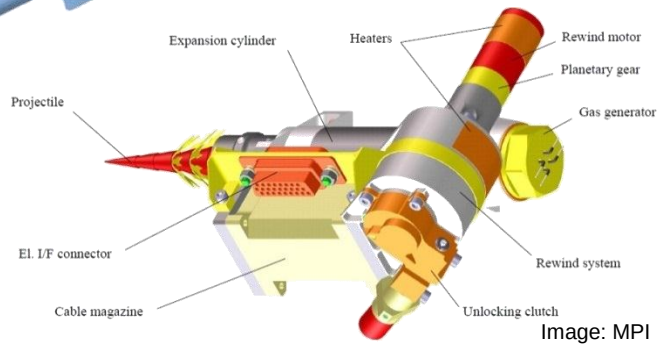

Image: MPI

Concepts for Option 2
Rigid Capture

1 Arm	2 Arms
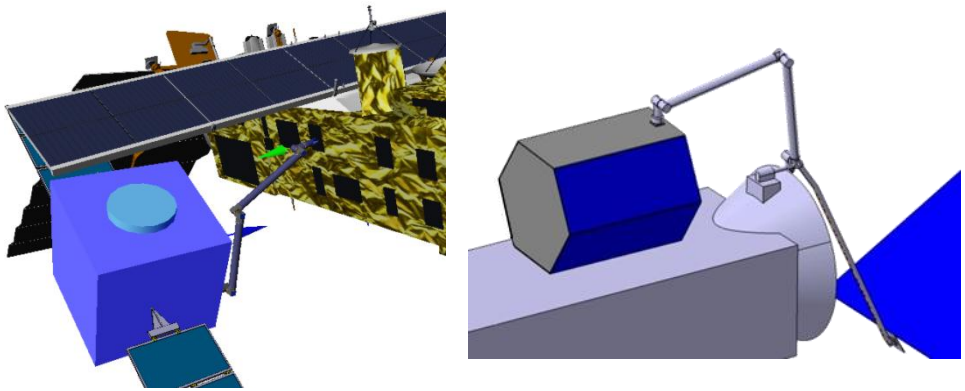	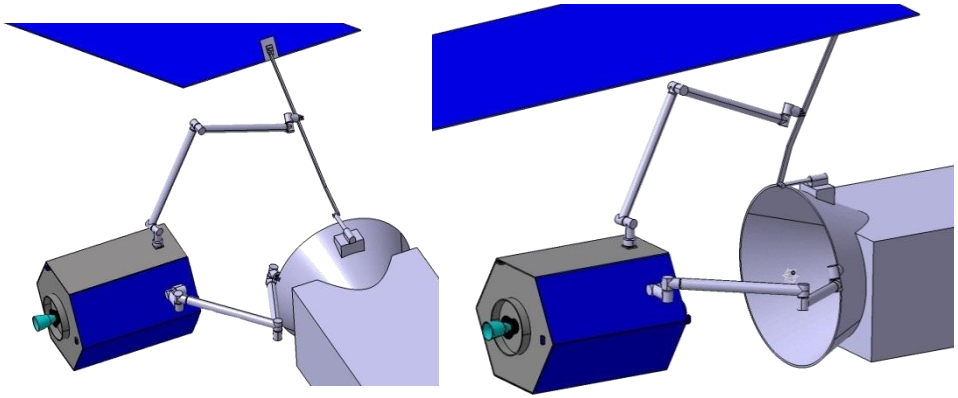
3 Arms	**1 Arm + Bus Fixation Device**
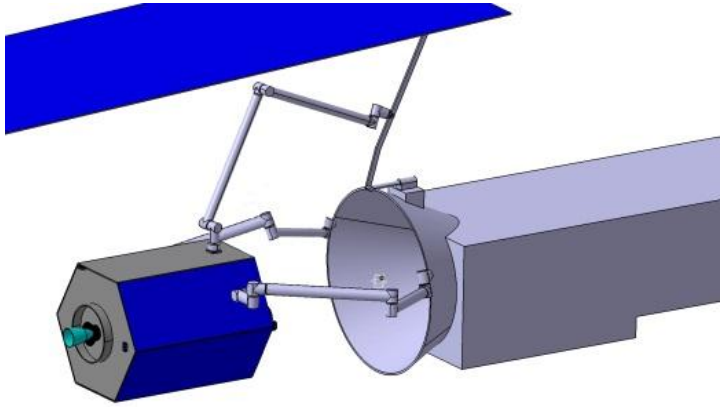	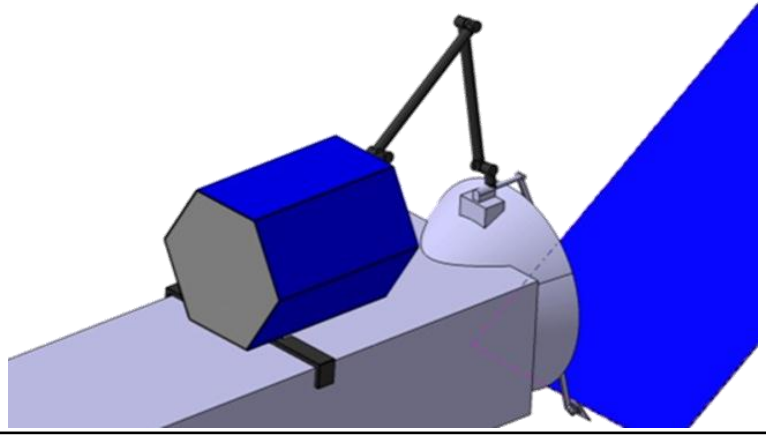

Concepts for Option 2
Rigid Capture

1 Arm + Gripper/Cutter Device	Arm+Gripper/Cutter Device+Docking Tool
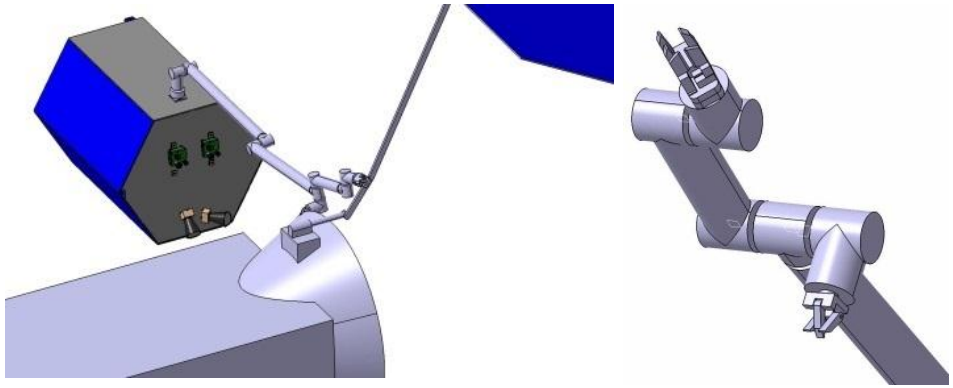	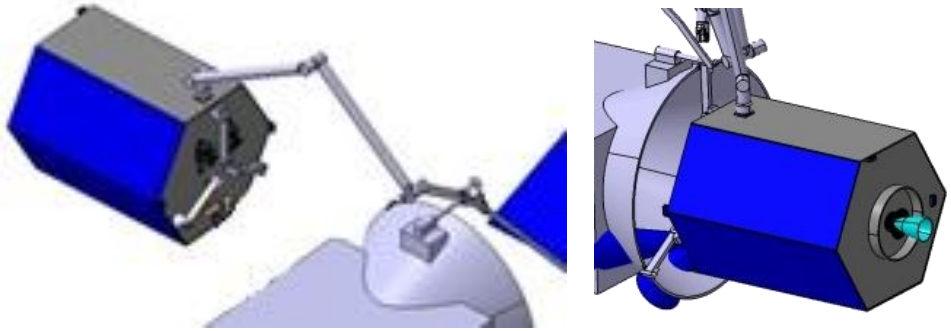
Tentacles	**Harpoon + Passive Fixation Device**
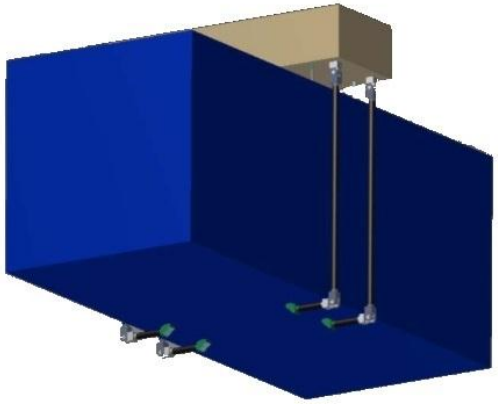	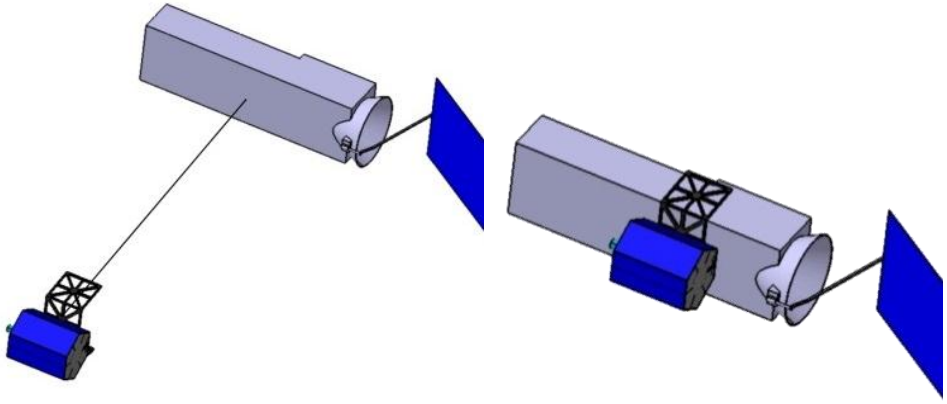

Agenda

Introduction

Target Definition

Capture Technologies

Mission Option Trade-Offs

Baseline Concepts

Summary

Capture Mechanism Trade Off

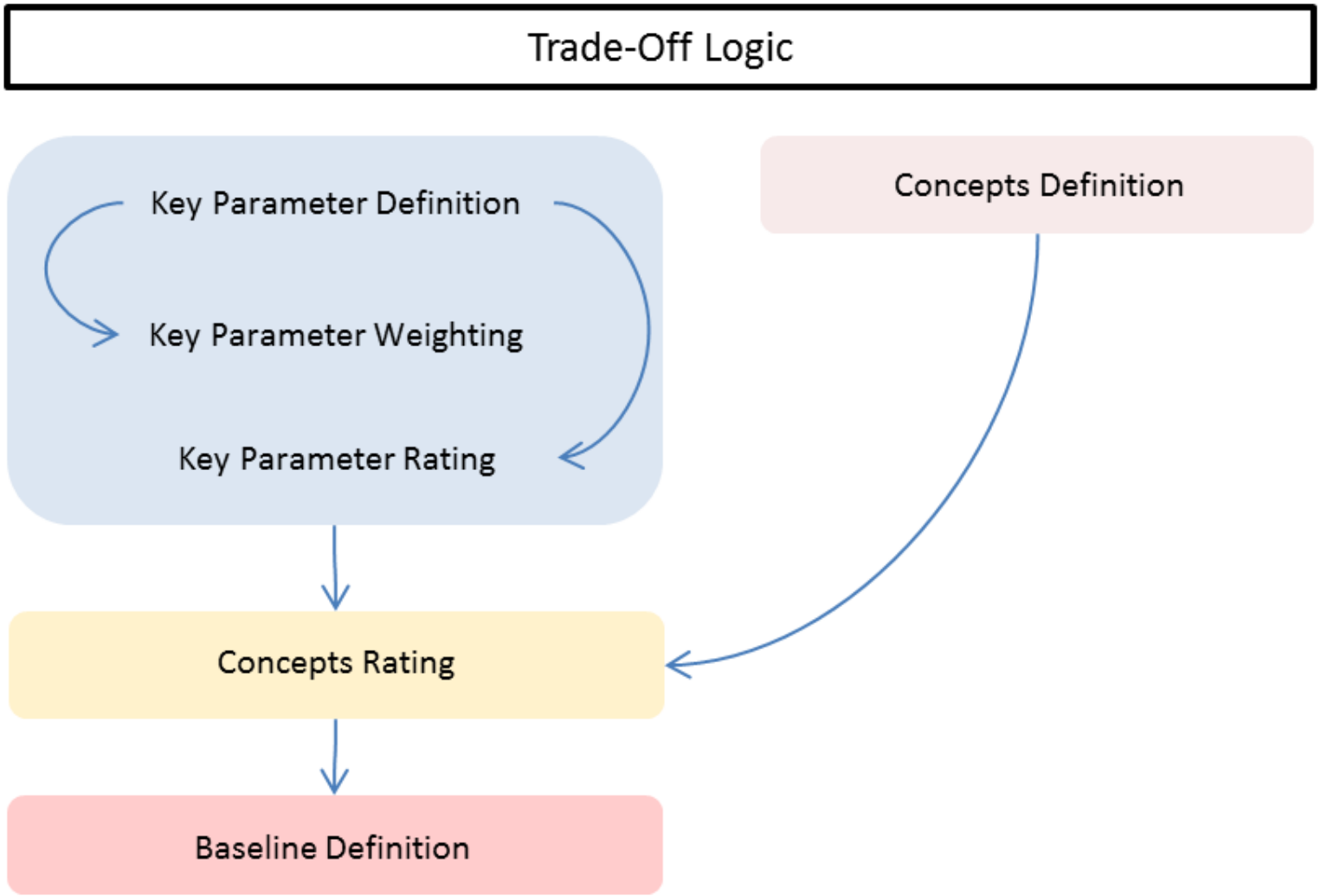

Capture Mechanisms Trade-Off
Benchmark Definition

Key Parameter associated to the capturing system only	Weighting	Benchmark	Benchmark Rating
Risk to fail and lead to an unsuccessful mission	10,00	Rigid 1 (1 Arm)	3
Cost including design effort, development, on ground verification, procurement and manufacturing	9,00	Rigid 1 (1 Arm)	3
Complexity related to the hardware and software of capture mechanism, taking into account the operational effort for a proper	7,00	Rigid 1 (1 Arm)	3
Maturity based on the available information, indicating the expected capturing system TRL in 2016	6,00	Rigid 1 (1 Arm)	4
Accommodation total mass and size of the capturing mechanism	3,00	Rigid 1 (1 Arm)	4
Power Demand requested by the capture mechanism to the chaser platform during operations	1,00	Rigid 1 (1 Arm)	3

Capture Mechanisms Trade-Off
Flexible Baseline: Net

Risk

- Both concepts have a limited number of attempts
- Both bear the risk to break structural weak items or penetrate tank
- Harpoon bears Risk to penetrate tank, batteries, solar cells,…
  → requires more accurate aiming than net

Cost

- Low costs for development, ground verification, manufacturing, etc.
- No complex or extraordinary mechanisms, electronics, S/W

Complexity

- Few H/W components, low S/W demand on board operations
- Short duration of approach and capture phase
- No close proximity operation

Maturity

- 2016 TRL for both concepts is assumed to be 5

Accommodation

- Harpoon is assumed to be lighter and easier to accommodate compared to the net

Power Demand

- Only electrical trigger for deployment devices + rewind mechanism

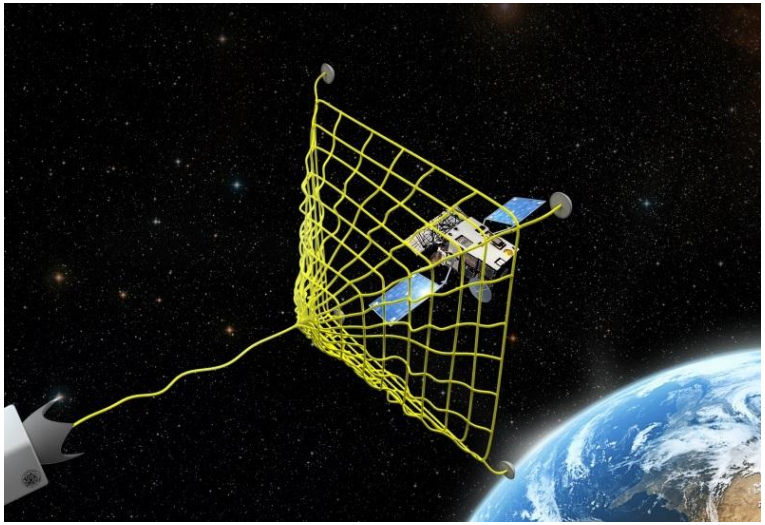

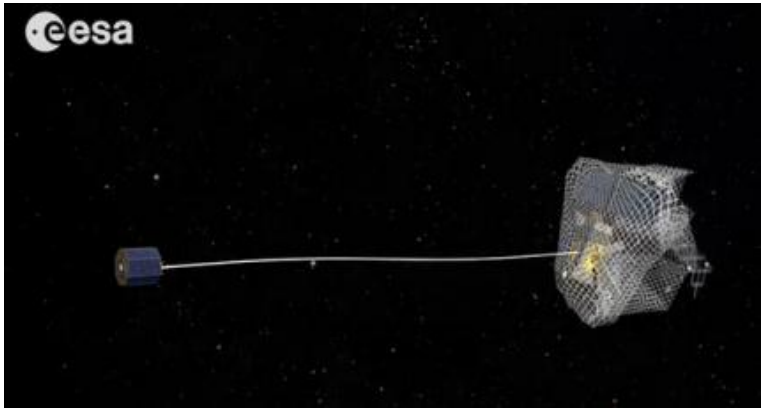

Capture Mechanisms Trade-Off
Rigid Baseline: Arm+Fix. Device

Risk
- Can cope with various situations and conditions.
- Firm docking of chaser + target
  → stack can be controlled very precise.
- Multiple load paths lead to lower loads
  → Lower risk to break parts

Cost
- Higher costs compared to an single arm or tentacles

Complexity
- Moderate complexity, driven by arm
- Fixation device is a simple mechanism

Maturity
- High maturity
  → Arm components already flown on ROCKVISS
  → Fixation device is a simple mechanism

Accommodation
- Easy to accommodate
  → mechanisms used to stow/fold both devices

Power Demand
- Moderate power demand due to arm
- Fixation device requires power only once for closing

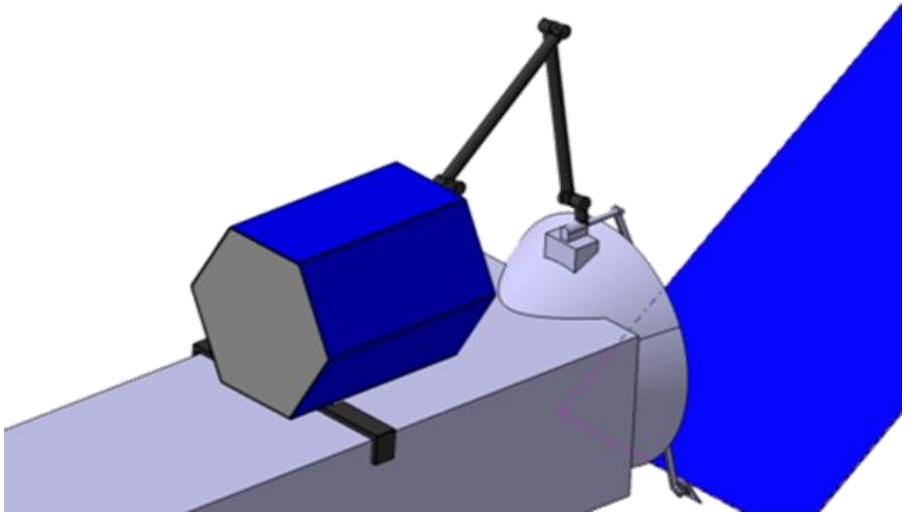

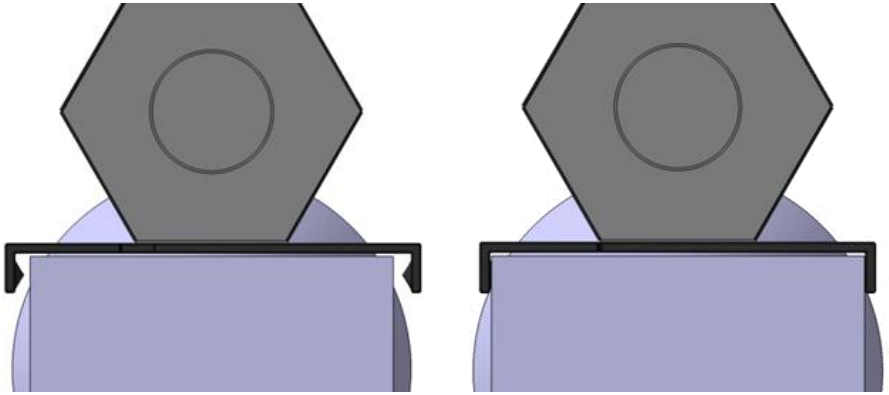

Mission Concepts Trade-Off
Mission Option 1 & 2

Three **parking orbit** options for injection orbit are identified:

- a low circular orbit (300 km altitude)
- an elliptical orbit with an apogee lying in the orbit of target (300 km perigee)
- a direct injection with VEGA into the target's orbit

The **controlled deorbiting** can be separated into two maneuver phases:

- The perigee lowering phase
- The final re-entry

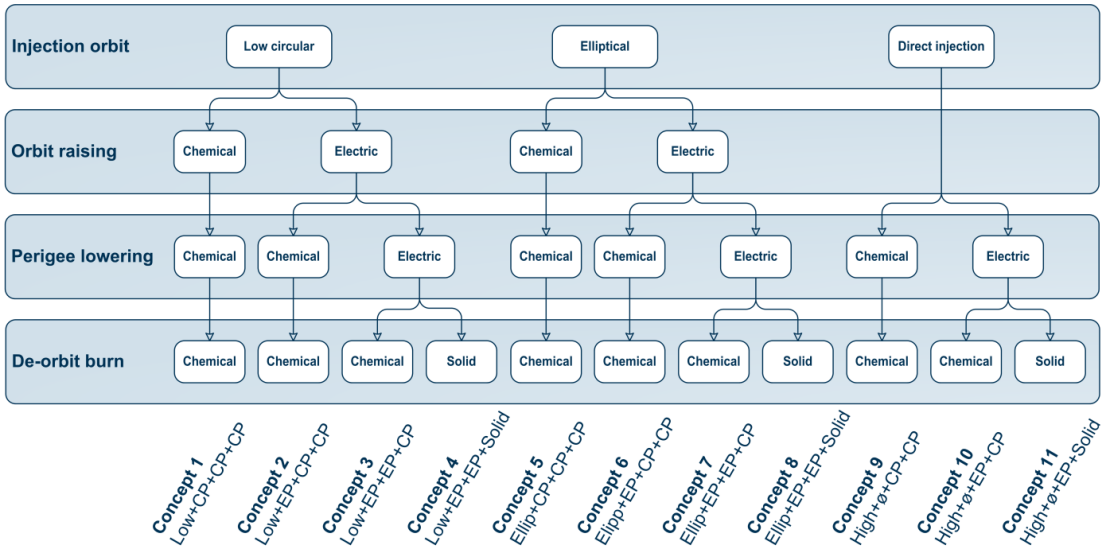

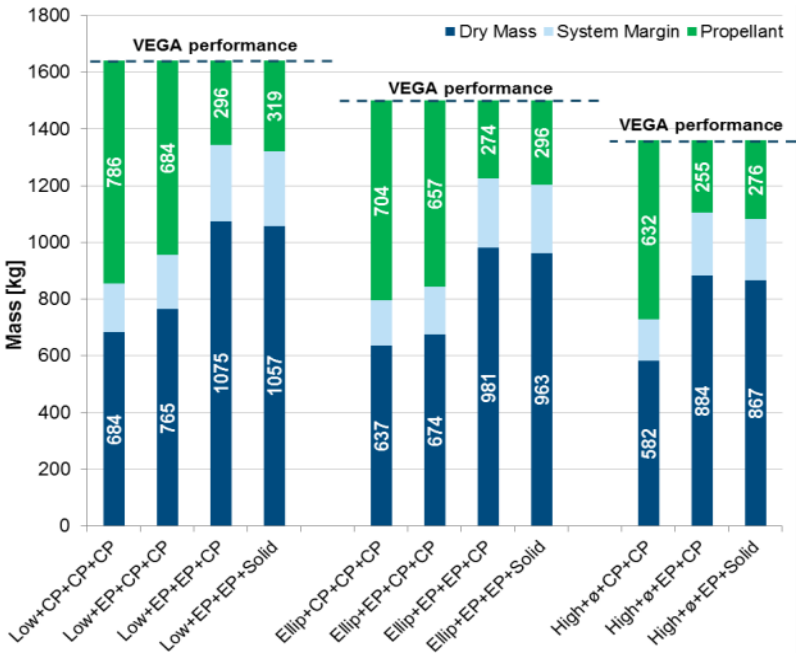

Mission Concepts Trade-Off
Mission Option 3

Three **parking orbit** options for injection orbit are identified:

- a low circular orbit (300 km altitude)
- an elliptical orbit with an apogee lying in the orbit of target (300 km perigee)
- a direct injection with VEGA into the target's orbit

The **re-orbiting** consist of the following maneuver phases:

- Spiral maneuver based on EP system (only if VEGA Baseline is kept)

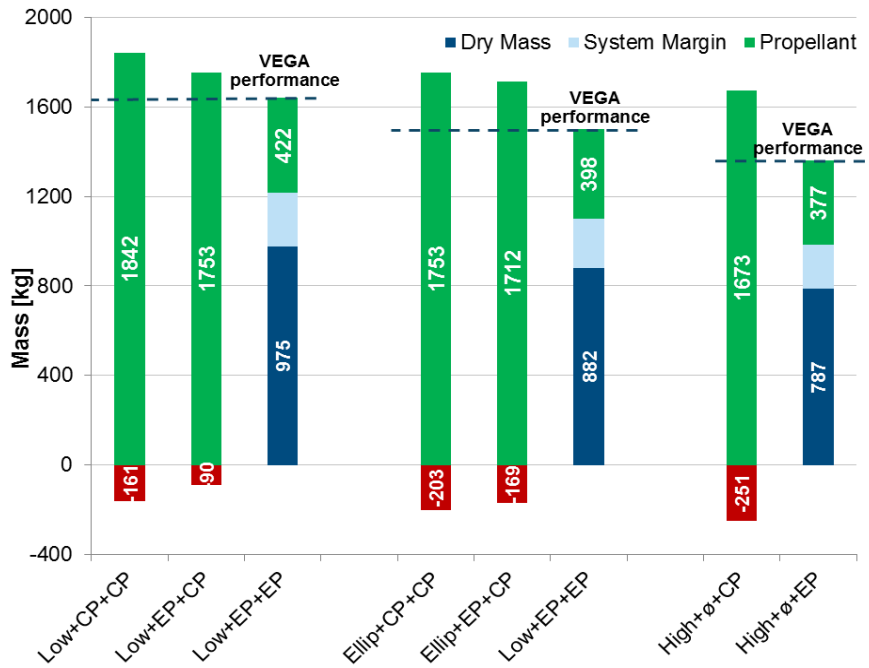

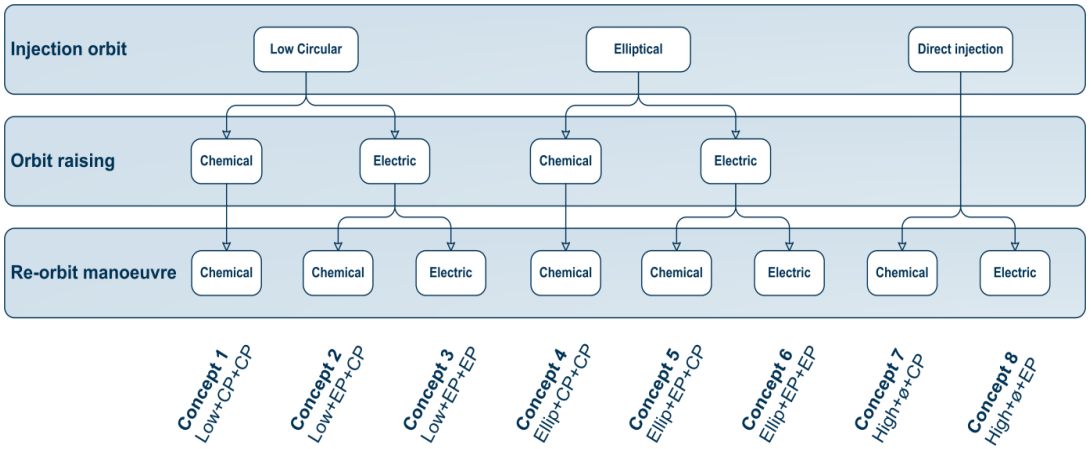

Mission Options Trade-Off
Benchmark Definition

Key Parameter associated to the mission	Weighting	Benchmark	Benchmark Rating
Mission Risk the risk associated to programmatic aspects (e.g. schedule) and to mission successful completion	10,00	Concept 1 Low+CP+CP+CP	5
Costs including chaser design, procurement & manufacturing effort, on ground verification & Operation	9,18	Concept 1 Low+CP+CP+CP	3
Maturity indicates the expected TRL in 2016 of the chaser satellite subsystem / equipment	7,55	Concept 1 Low+CP+CP+CP	5
System Complexity of the chaser including design effort, on ground verification and on ground operations	5,91	Concept 1 Low+CP+CP+CP	3
System Mass before RdV, mainly influenced by the propulsion subsystem typology	5,09	Concept 1 Low+CP+CP+CP	1
System Power requested by the chaser during all mission phases	2,64	Concept 1 Low+CP+CP+CP	3

Mission Concepts Trade-Off
Mission Option 1 & 2 Baseline

Mission Risk

- Lower risk regarding accommodation, procurement and satellite level test
  → Consistent typology of propulsion system
  → All thrusters chemical

Cost

- Lower/Moderate costs compared to electric propulsion

System Maturity

- High maturity, TRL 8-9 for chem. propulsion system

System Complexity

- Low complexity due to consistent typology
- Low number of burns

System Mass

- High mass due to required propellant

System Power

- Moderate power demand, lower than for electric propulsion

Mission Duration

- Short mission duration due to low number of burns

- Elliptical orbit with an apogee lying in the orbit of target (300 km perigee)
- All orbit maneuvers done by chemical propulsion

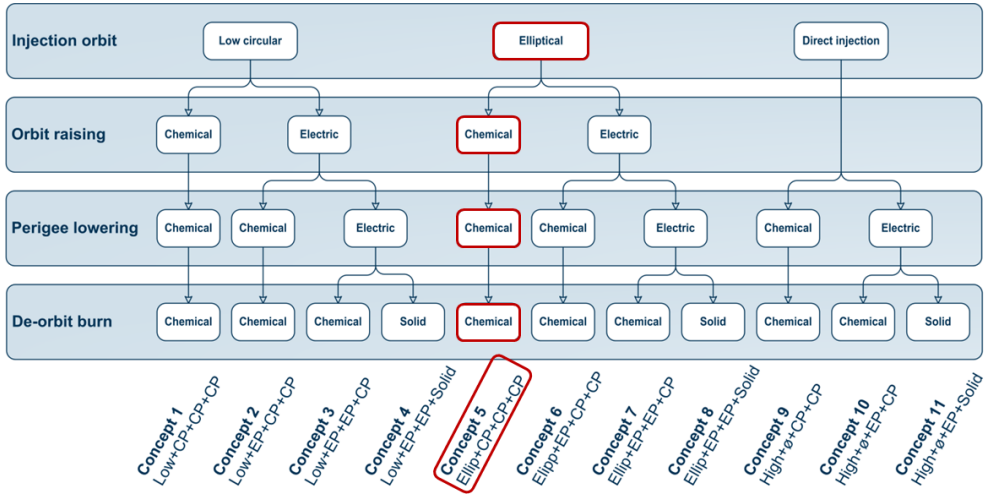

Mission Concepts Trade-Off
Mission Option 3 Baseline

Mission Risk
- Concept 7: moderate Risk due to EP
- Concept 8: lower risk due to CP

Cost
- Concept 7: very high costs → Soyuz launch
- Concept 8: moderate costs → Vega launch

System Maturity
- Both very high; both systems already flown

System Complexity
- Concept 7: low complexity due low number of burns
- Concept 8: moderate complexity → mission planning

System Mass
- Concept 7: moderate mass → Propellant
- Concept 8: very low mass → Propellant

System Power
- Concept 7: moderate power
- Concept 8: very high power → EP

Mission Duration
- Concept 7: moderate duration
- Concept 8: very long duration

Two Options were rated very close:

- Direct injection in target orbit
- Re-orbit maneuver performed by **Chemical** or **Electric** Propulsion

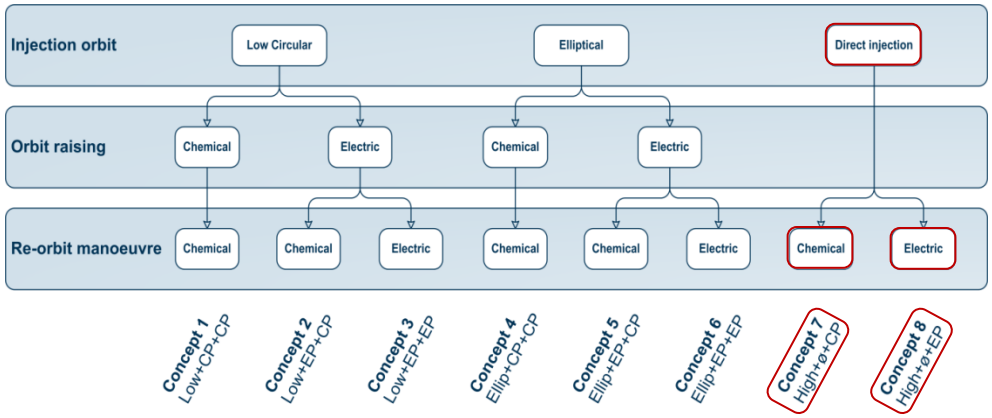

Mission Concepts Trade-Off

Concept 7 (Baseline) CP based – Soyuz launch		Concept 8 EP based – VEGA launch	
Pro	**Con**	**Pro**	**Con**
✓ Low risk ✓ Low complexity ✓ Both rigid and flexible capture mechanism applicable	- High cost due to Soyuz launcher - Chaser Propulsion subsystem complexity - Chaser high mass	✓ Low cost due to VEGA launcher ✓ Chaser low mass	- Solar array size - Complex EPS design - Difficult approach to Envisat due to the size of solar panels - Difficult to apply a rigid mechanism solution - Low trust - Long mission duration - Effort in mission operations

- Concept 7 is proposed as baseline due to advantages in terms of mission risk and complexity
- Soyuz upper stage should release the Chaser into the target's orbit
- Re-orbiting is performed after the stack is stabilized by chemical propulsion.

Project Status
Introduction

MBR Baseline Concepts

Option 1	Option 2	Option 3
Mission: ▪ Vega ▪ Elliptical orbit injection ▪ Chemical propulsion **Capturing Mechanism:** ▪ Two Nets	**Mission:** ▪ Vega ▪ Elliptical orbit injection ▪ Chemical propulsion **Capturing Mechanism:** ▪ Robotic Arm ▪ Bus Fixation Device	**Mission:** ▪ Soyuz ▪ Target orbit injection ▪ Chemical propulsion **Capturing Mechanism:** ▪ Robotic Arm ▪ Bus Fixation Device
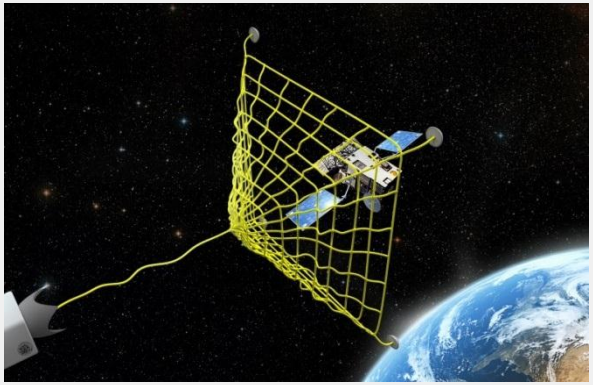	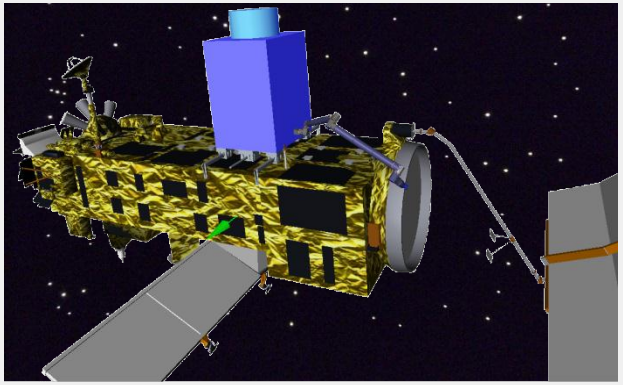	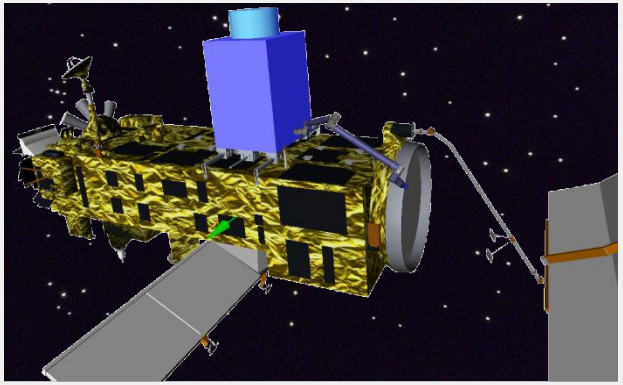

Agenda

Introduction

Target Definition

Capture Technologies

Mission Option Trade-Offs

Baseline Concepts

Summary

Baseline Definitions
Mission Concept 1

Structure
- Sandwich CFRP + AL Honeycomb

Power
- Body mounted GaAs solar cells

Chemical Propulsion
- 4 PTD-222 diaphragm tanks (MT Aerospace)
- Capacity 222 liters each
- 4x S400-15 bi-propellant thrusters (Airbus DS)

AOCS/GNC
- Start Trackers, Sunsensors
- Accelerometer
- Angular Rate Sensors
- GPS
- 4x Reaction Wheels
- 20x 10N-Thrusters
- VBS Cameras

S-Band Communication

Active Thermal Control System

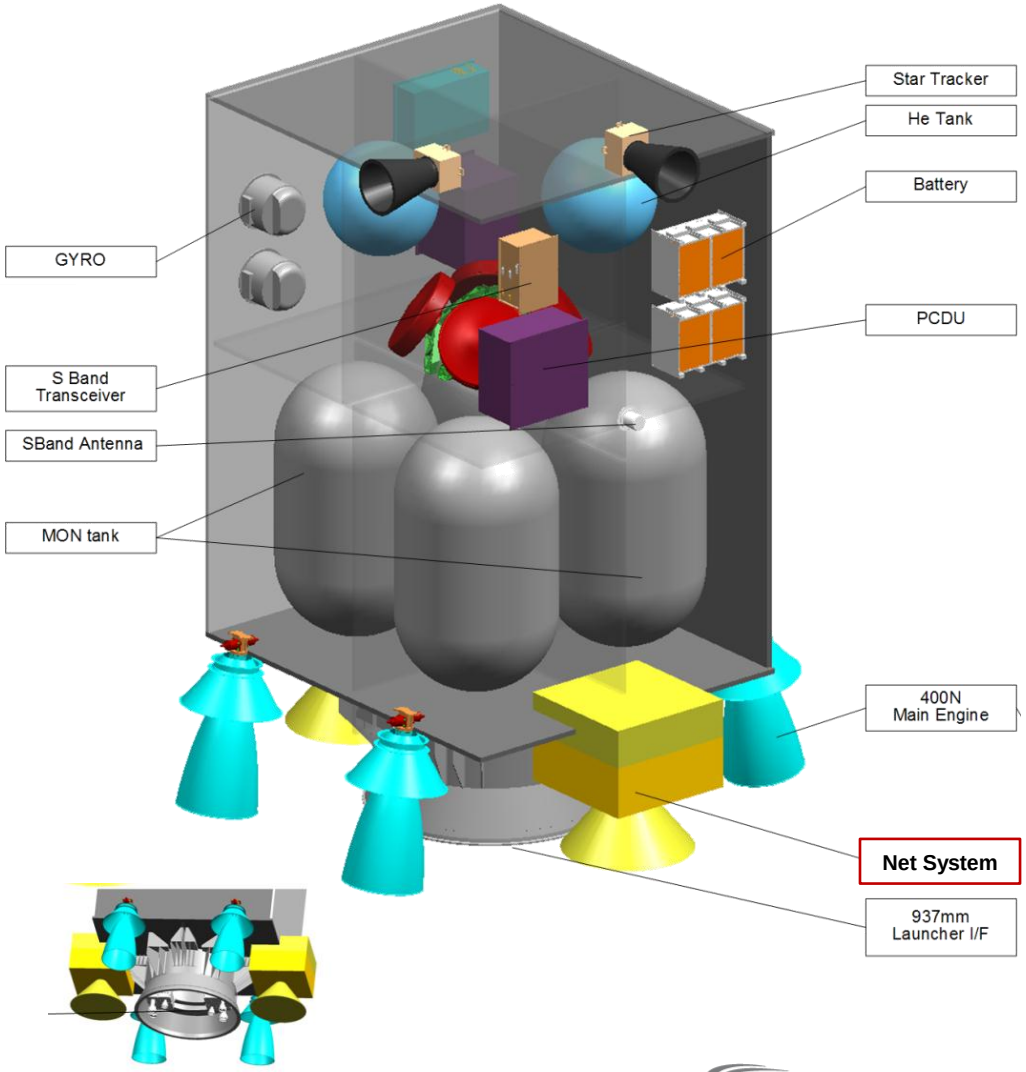

Baseline Definitions
Mission Concept 1

Net
- ~60m x 60m, wrapping whole target (60mx60m)

4 Bullets
- Drive the net deployment from a safe distance

Closing mechanism
- Speed up the net target wrapping
- Sized to be robust, activation event-driven

Tether
- <100m

Reel mechanism
- Fold the tether before operations
- Provide smooth tether deployment
- No active control during disposal phase

Ejection S\S
- Cold gas pneumatic system

Sensors
- Casting\disposal: cameras
- Disposal: tension sensors on tether

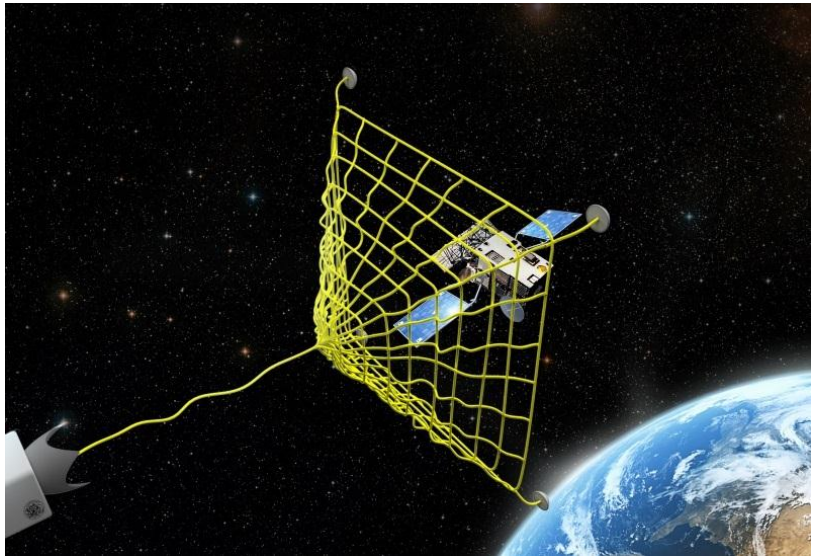

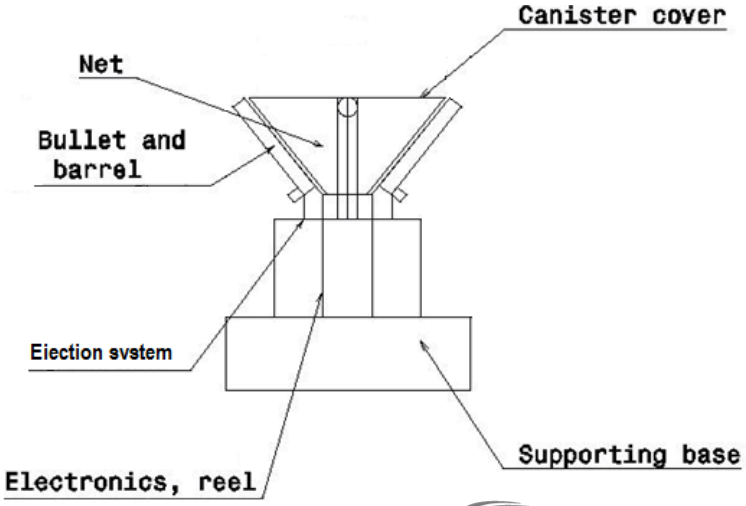

Baseline Definitions
Mission Concept 2

Structure
- Sandwich CFRP + AL Honeycomb

Power
- Body mounted GaAs solar cells

Chemical Propulsion
- 4 PTD-222 diaphragm tanks (MT Aerospace)
- Capacity 222 liters each
- 4x S400-15 bi-propellant thrusters (Airbus DS)

AOCS/GNC
- Start Trackers, Sunsensors
- Accelerometer
- Angular Rate Sensors
- GPS
- 4x Reaction Wheels
- 20x 10N-Thrusters
- VBS Cameras

S-Band Communication

Active Thermal Control System

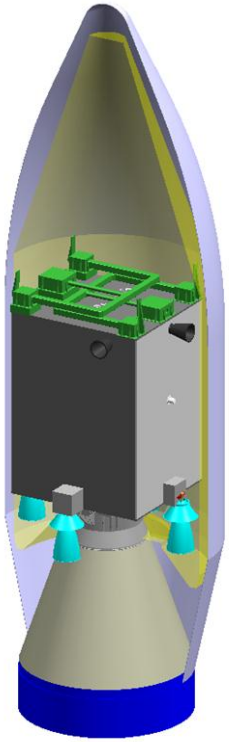

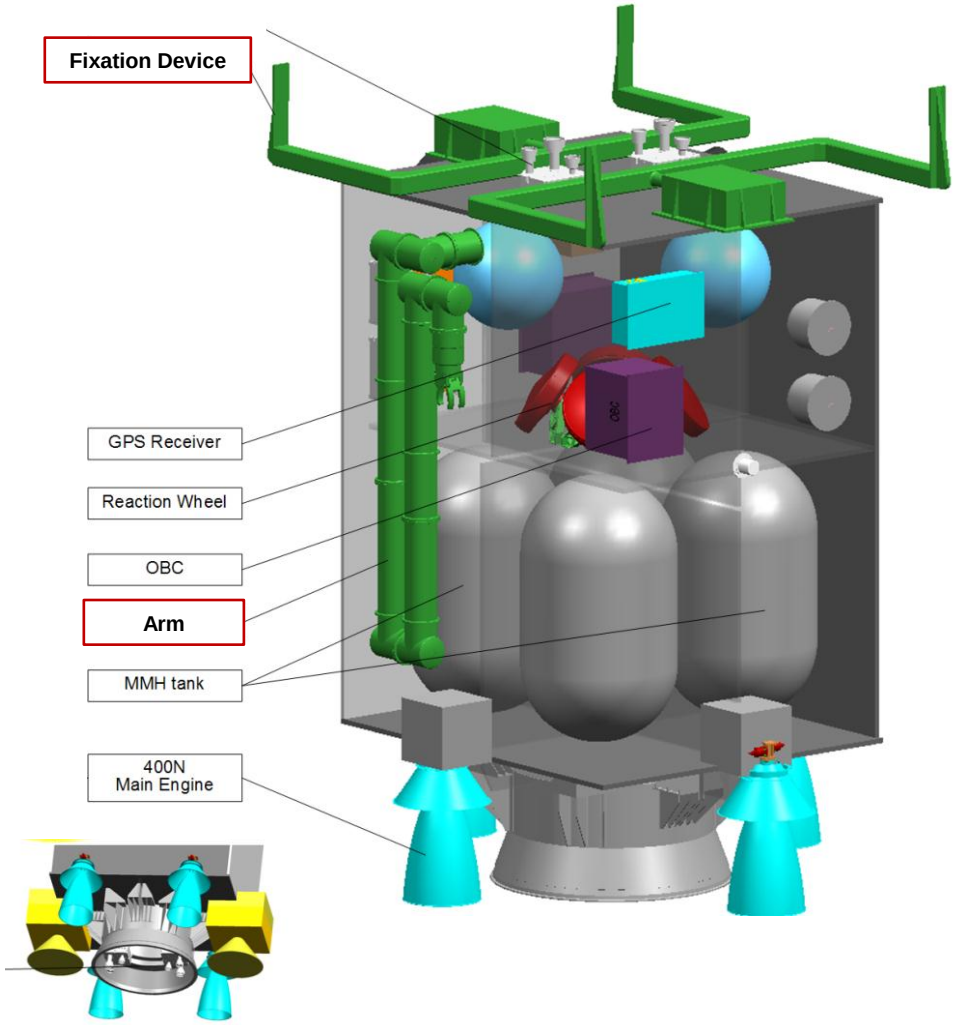

Baseline Definitions
Mission Concept 2

- Repetitive and compliant capture
- 7-DoF impedance-controlled dexterous manipulator
  - of approx. 4m length
  - max. torque of 140Nm per joint
  - 1250N gripper grasp force
- Pose estimation error compensation through Visual Servoing at TCP and gripper sensor package
- Specifically designed for grasping the adapter ring from outside
  → could be used for general grasp, e.g. of the solar array boom
- Capture, stabilization and stack de-tumbling (35N) with arm, de-orbit (240N) with clamp mechanism

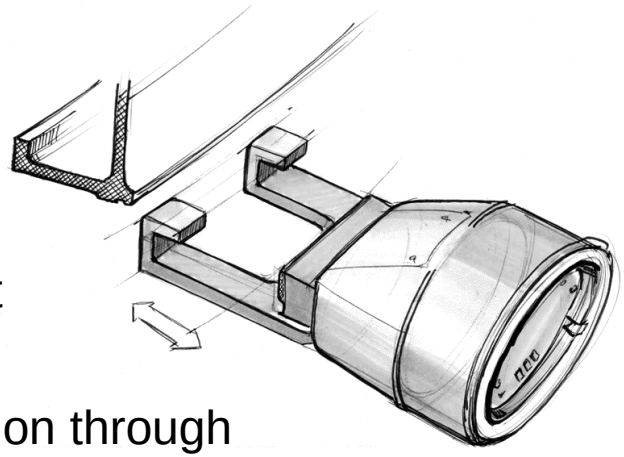

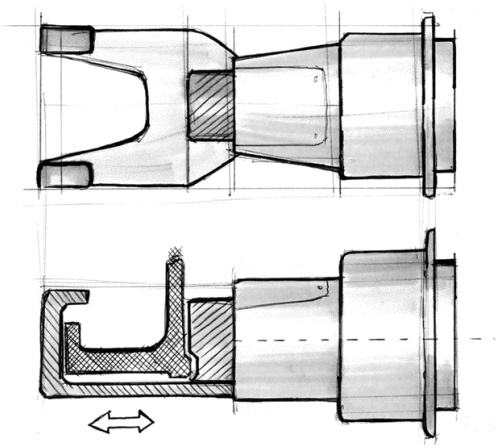

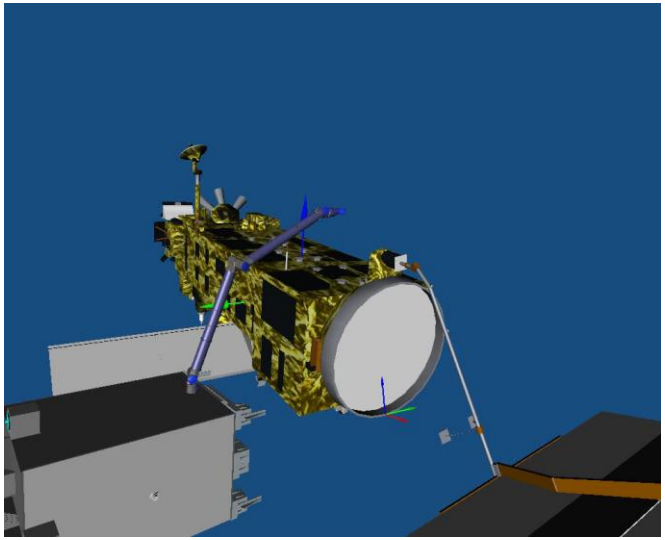

Baseline Definitions
Mission Concept 3

Structure
- Sandwich CFRP + AL Honeycomb

Power
- Body mounted GaAs solar cells

Chemical Propulsion
- 2 OST-24/0 tanks (Airbus D&S)
- Capacity 1207 liters each
- 4x S400-15 bi-propellant thrusters (Airbus DS)

AOCS/GNC
- Start Trackers, Sunsensors
- Accelerometer
- Angular Rate Sensors
- GPS
- 4x Reaction Wheels
- 20x 10N-Thrusters
- VBS Cameras

S-Band Communication

Active Thermal Control System

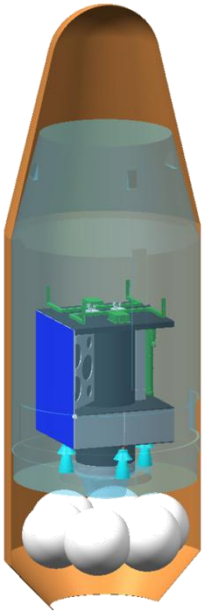

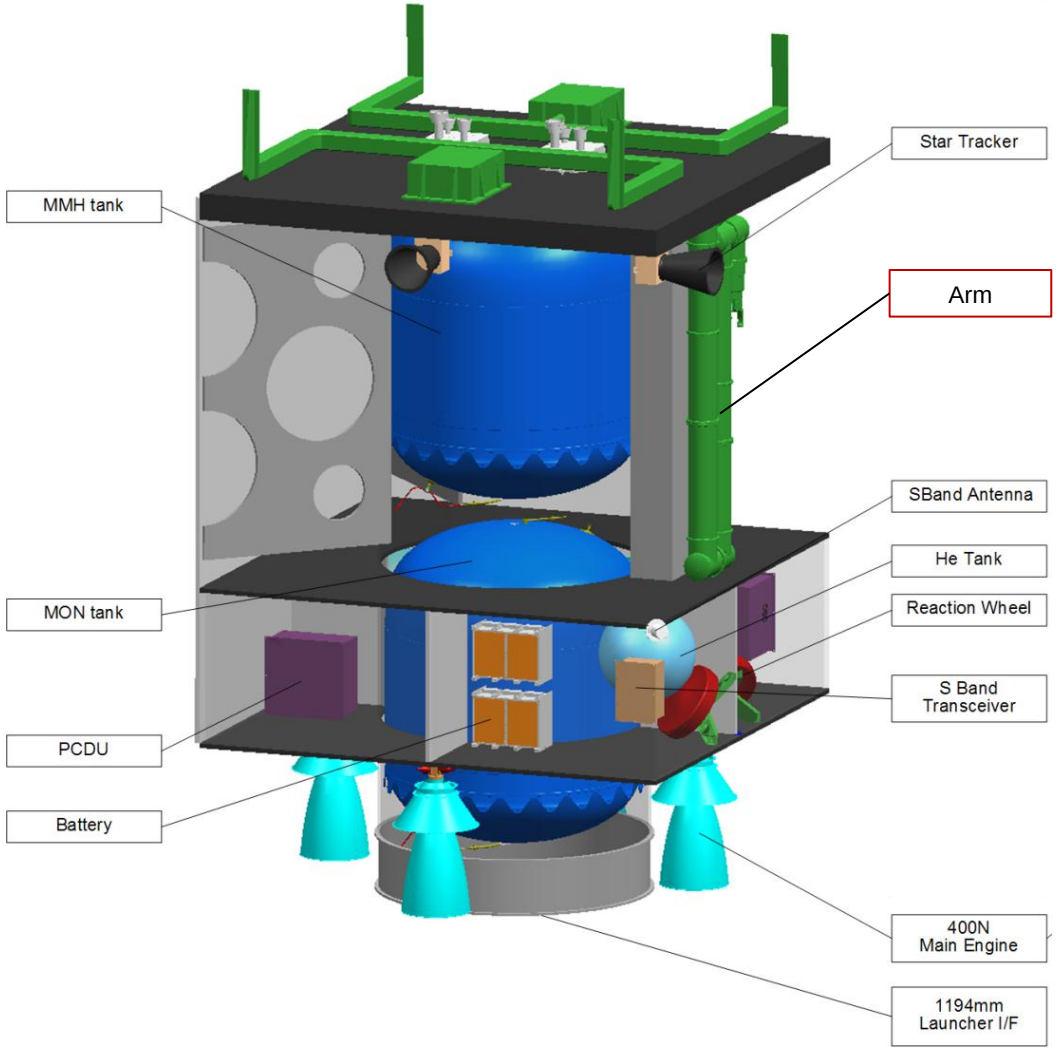

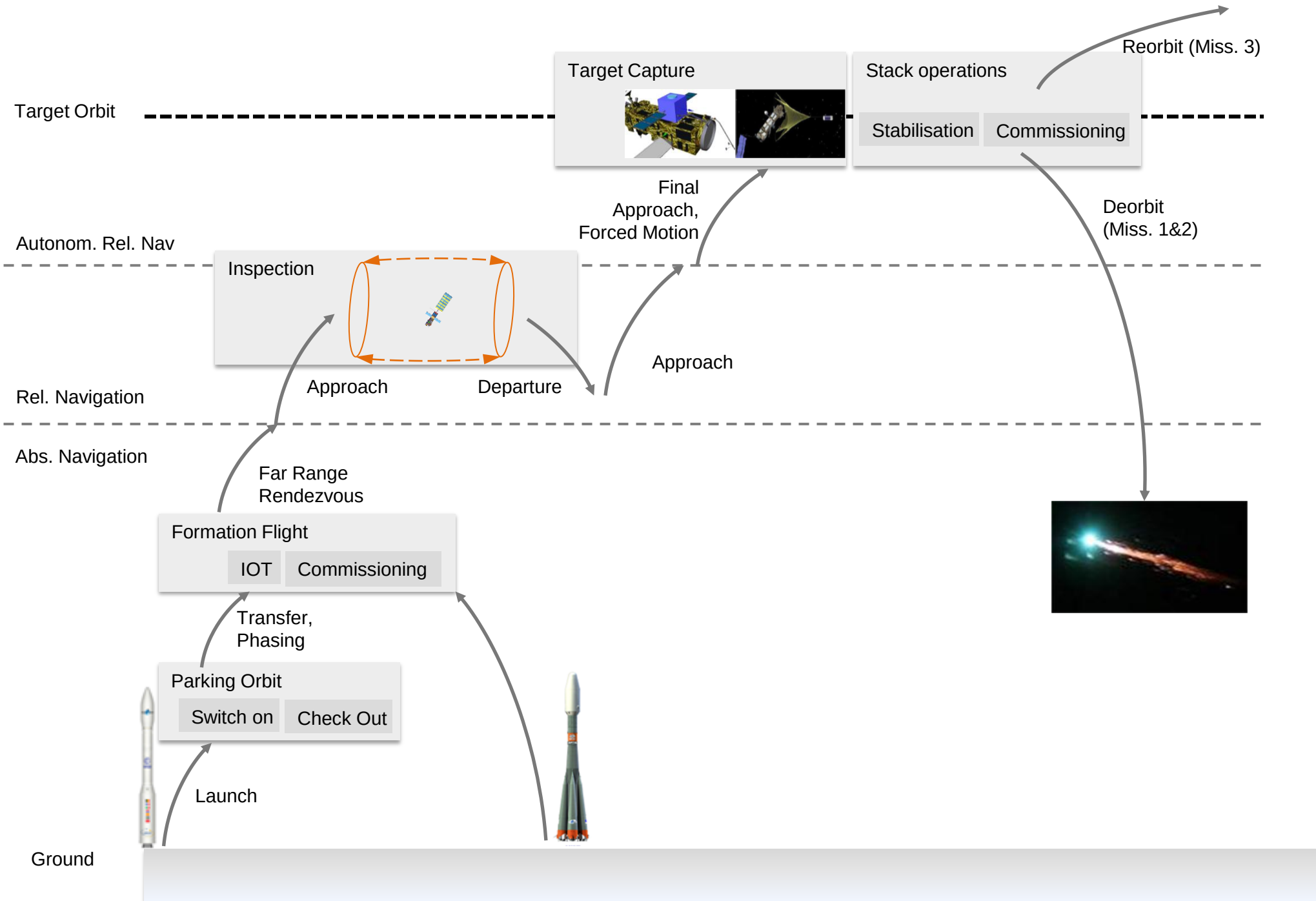
Target Orbit
Target Capture
Stack operations
Stabilisation
Commissioning
Reorbit (Miss. 3)
Final
Approach,
Forced Motion
Deorbit
(Miss. 1&2)
Autonom. Rel. Nav
Inspection
Approach
Departure
Approach
Rel. Navigation
Abs. Navigation
Far Range
Rendezvous
Formation Flight
IOT
Commissioning
Transfer,
Phasing
Parking Orbit
Switch on
Check Out
Launch
Ground

Agenda

Introduction

Target Definition

Capture Technologies

Mission Option Trade-Offs

Baseline Concepts

Summary

Summary

- Feasible concepts have been found for all three mission options
- No show-stoppers have been identified
- System level and cost assessment for each baseline is ongoing
- Final Results will be delivered to ESA in July 2014

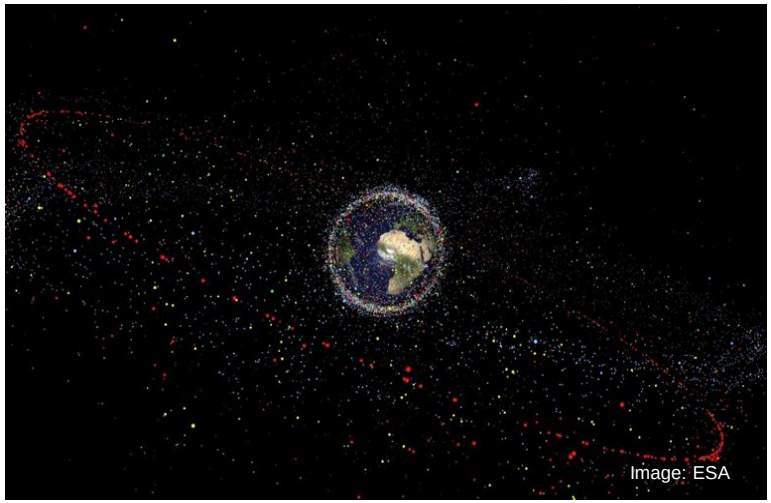

End

Thank You for Your Attention!