EarthCARE
PF/PL Architecture & Interfaces

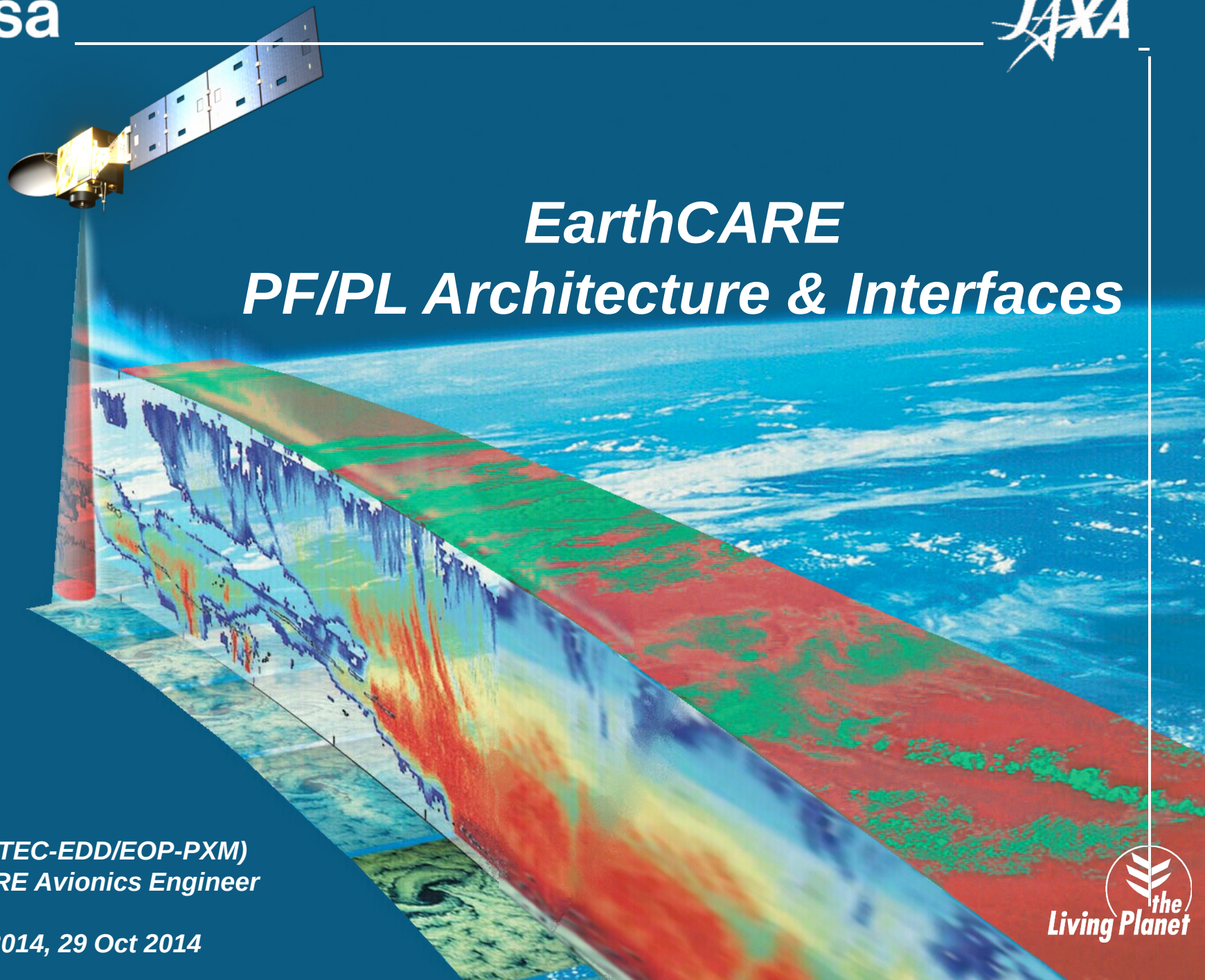

P. Roos (TEC-EDD/EOP-PXM)
EarthCARE Avionics Engineer

ADCSS 2014, 29 Oct 2014

Outline

1. EarthCARE Mission Overview

2. PF/PL Architecture & Interfaces

3. Payload Interface Simulator Assembly (PISA)

4. Conclusion

Mission Overview (1 / 2)

*Unique **synergistic products***

=>

Simultaneous observations of same location with different remote sensing techniques

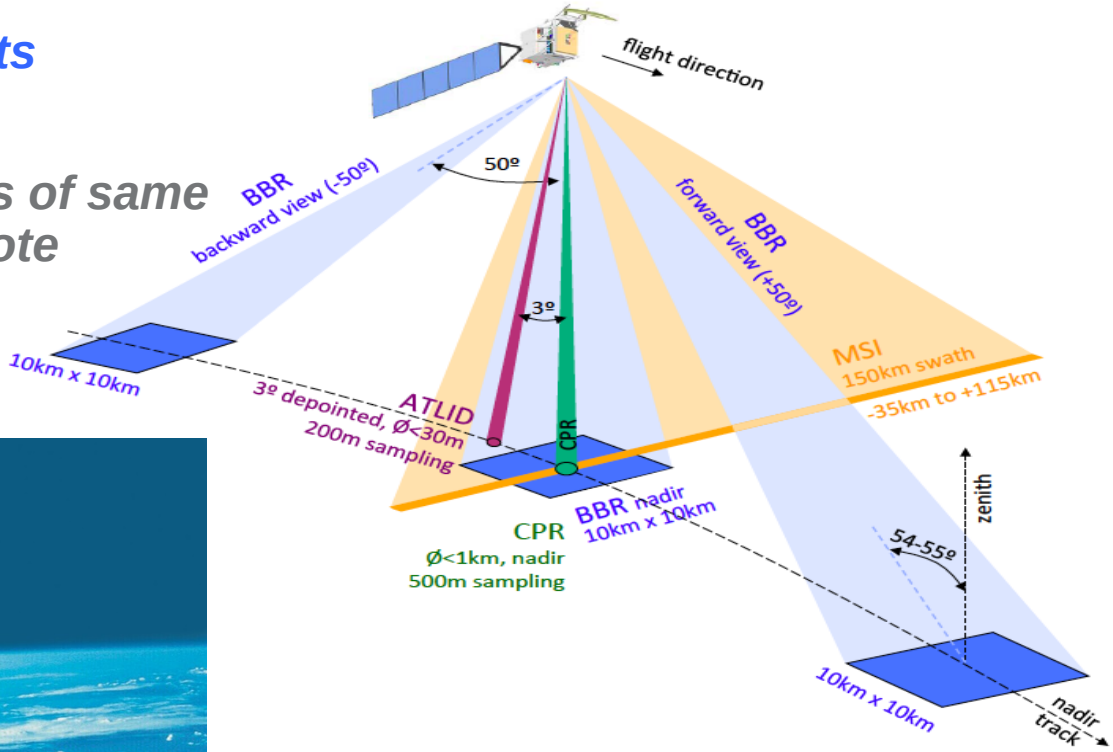

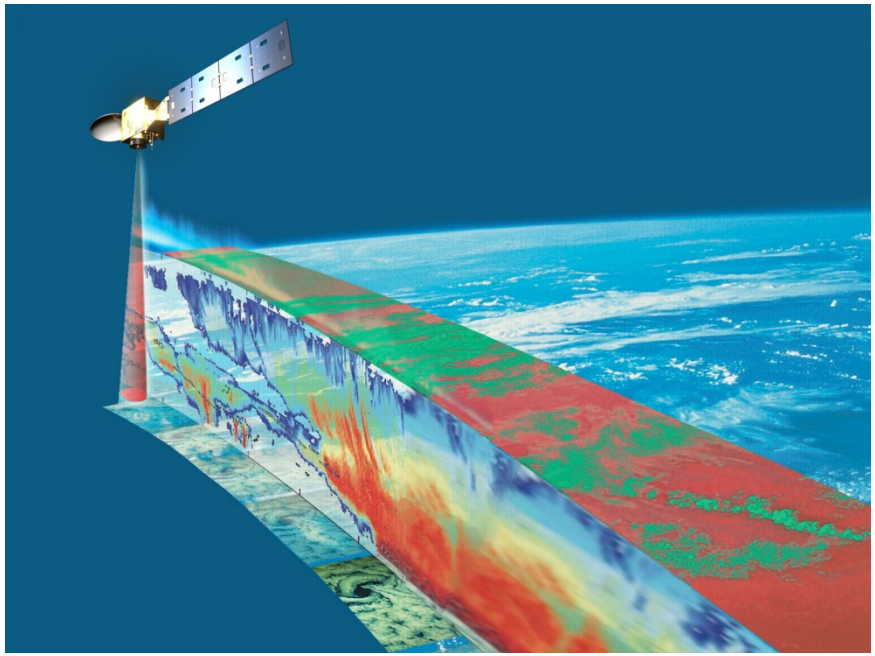

***Global coverage** achieved thanks to MSI swath and 25-day/380-orbit repeat cycle*

Mission Overview (2 / 2)

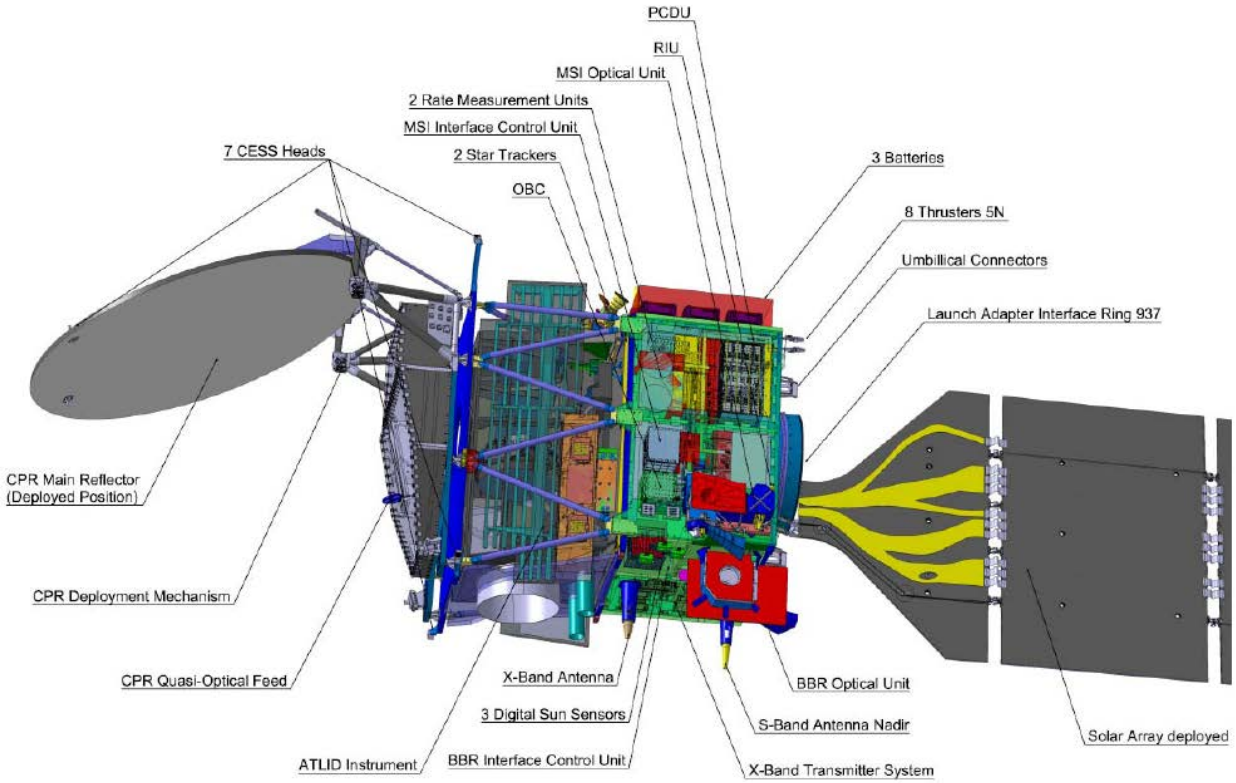

Prime contractor:	***ADS (D)***		
Instrument subco:	***ATLID***	***=>***	***ADS (F)***
	BBR	***=>***	***TAS-UK/RAL (UK)***
	MSI	***=>***	***SSTL (UK)***
CFI:	***CPR***	***=>***	***JAXA (Japan)***

PF/PL Architecture & Interfaces (1/7)

PF / PL Architecture & Interfaces (2 / 7)

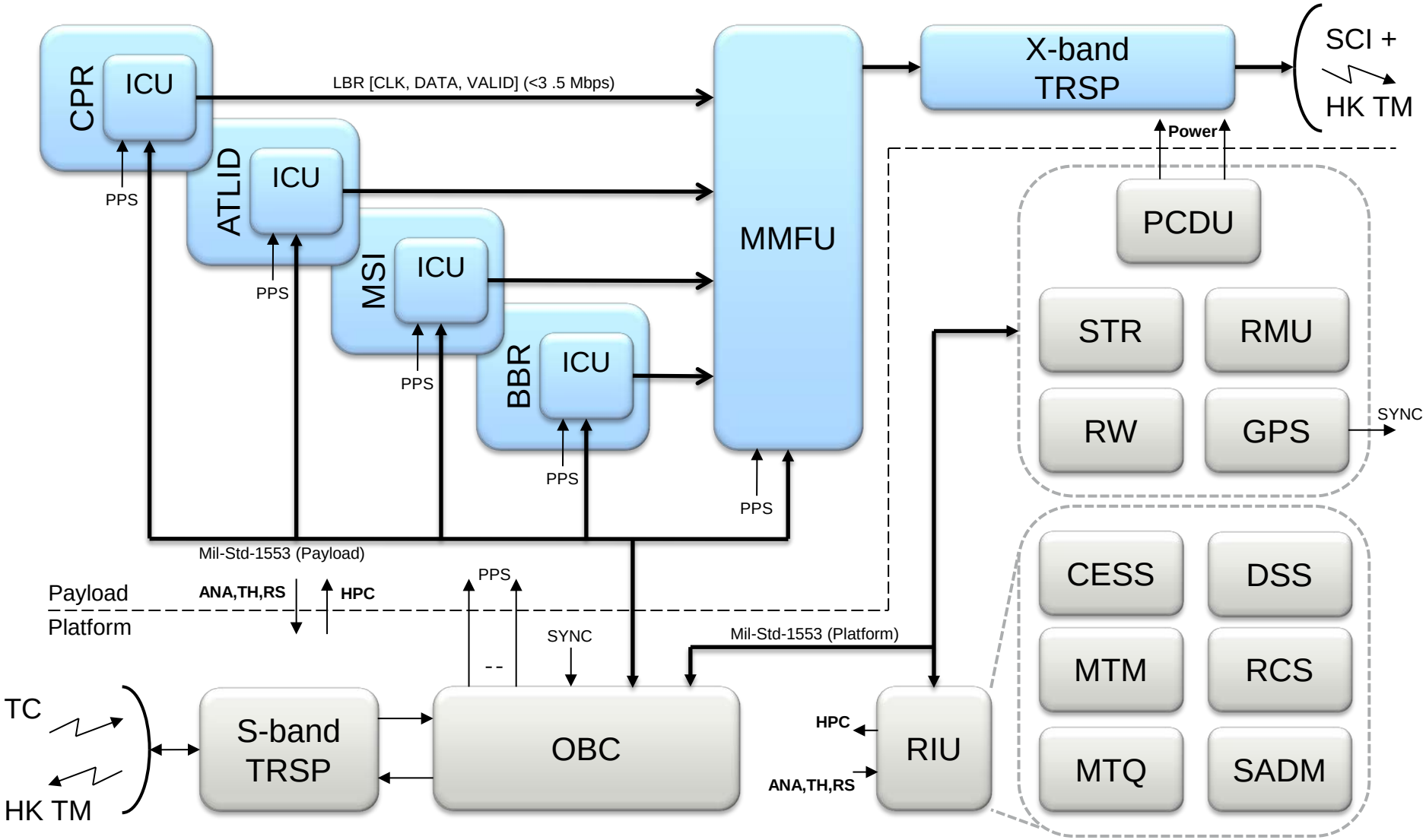

PF / PL Architecture & Interfaces (2 / 7)

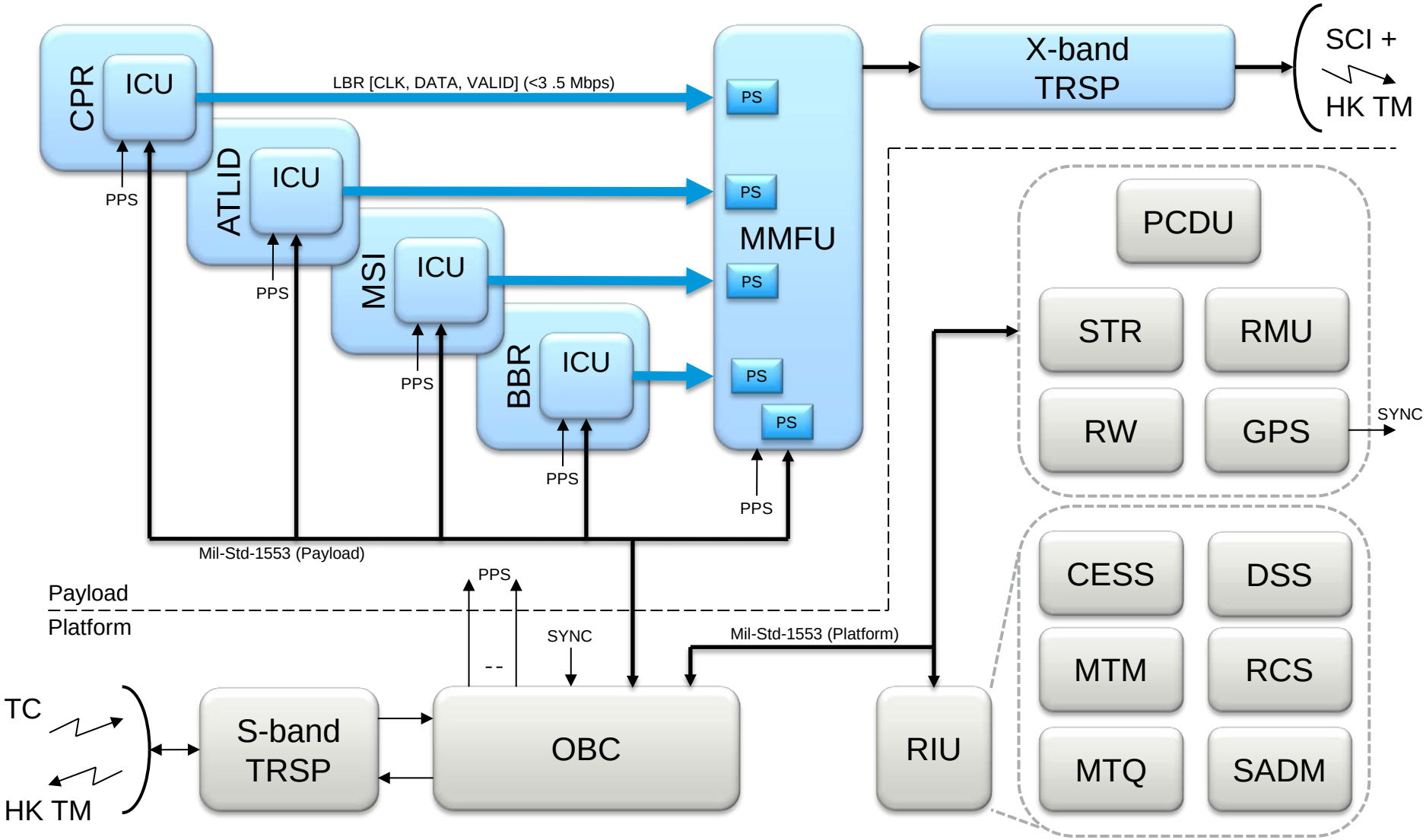

PF/PL Architecture & Interfaces (3/7)

- **Instrument – MMFU Interface (LBR: Low Bit Rate)**
  - Architecture
    - CCSDS Packets
    - One Packet Store per instrument
    - No handshake, central buffering in MMFU
    - X-strapping in MMFU

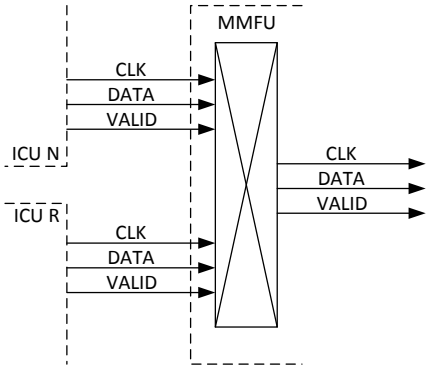

  - Higher Layer Protocol
    - Valid signal active for each Packet transmitted

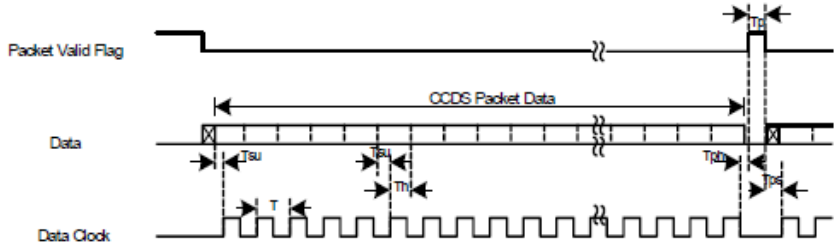

  - Lessons Learned
    - Simple electrical and protocol interface for Instruments
    - Suitable for low rate applications
    - X-strapping in MMFU not straightforward

PF/PL Architecture & Interfaces (4/7)

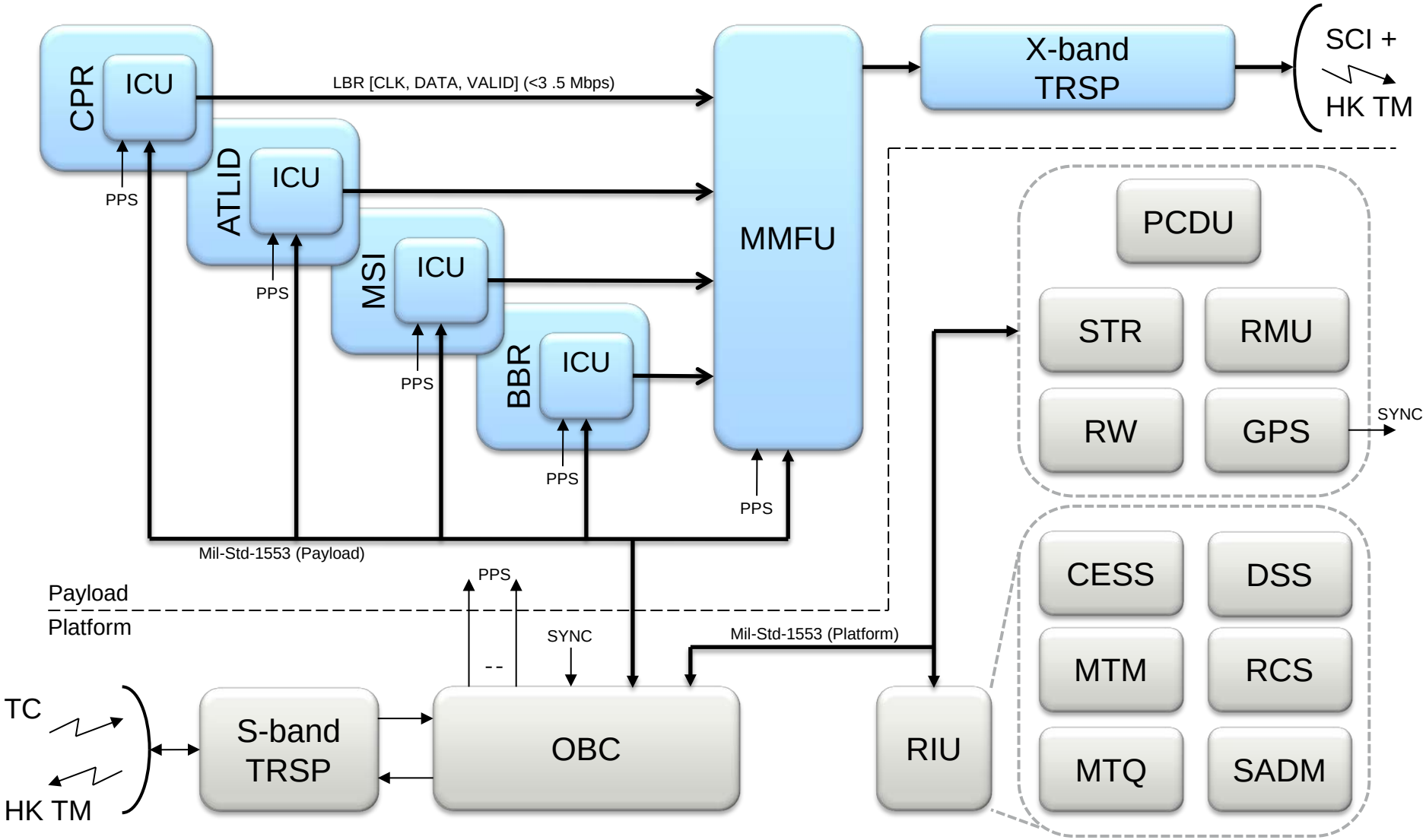

PF / PL Architecture & Interfaces (4 / 7)

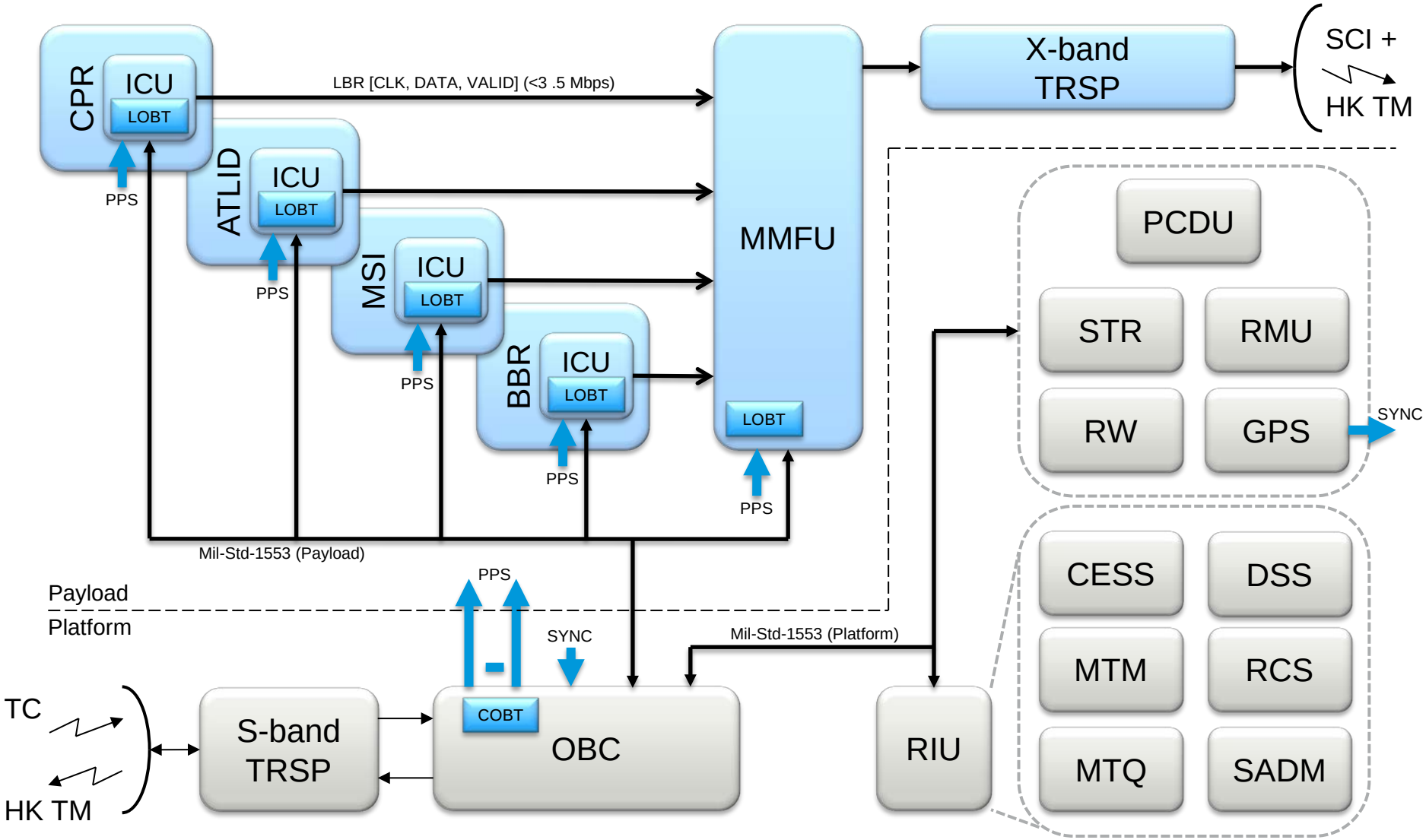

PF/PL Architecture & Interfaces (5/7)

- **Time Distribution**
  - Architecture
    - GPS based via OBC
    - Redundant PPS Interface
    - Redundancy selection via PUS command

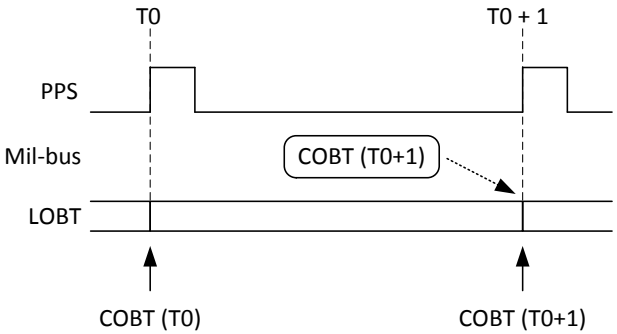

  - Higher Layer Protocol
    - Local On-board Time (LOBT) hard synced to Central On-board Time (COBT)
    - LOBT free-running in case PPS is lost
    - COBT to LOBT Synchronisation accuracy requirement ≈100 us
    - Synchronisation & Time quality Telemetry

  - Lessons learned
    - Appears simple but has also caused many issues
      - Test cases: missing PPS, spurious PPS, missing Time Message etc.
      - Loss of sync, Resynchronisation
      - Event generation & TM reporting
    - **Standard set of requirements and test cases /and or Handbook for Time Distribution & Synchronisation could be useful**

PF / PL Architecture & Interfaces (6 / 7)

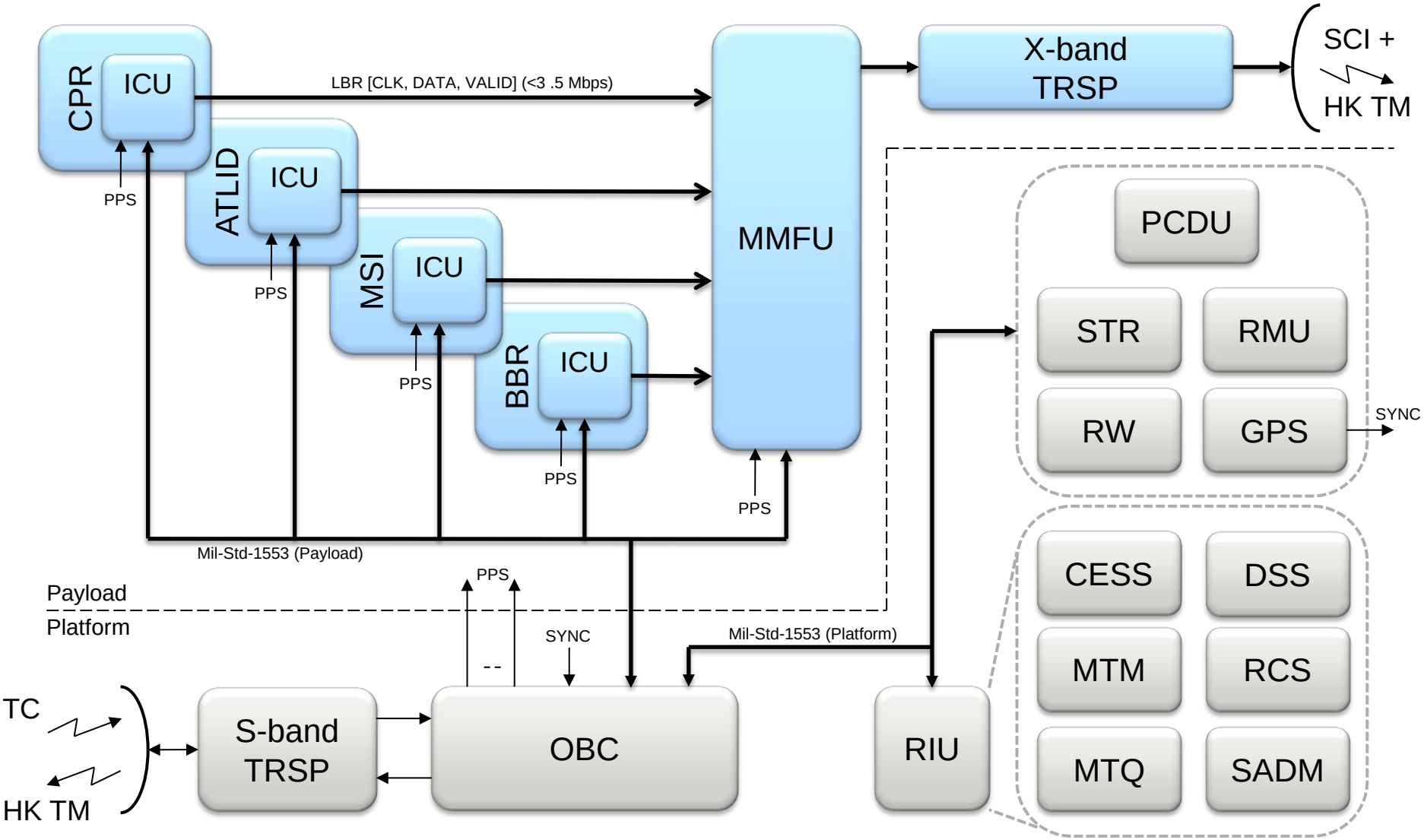

PF / PL Architecture & Interfaces (6 / 7)

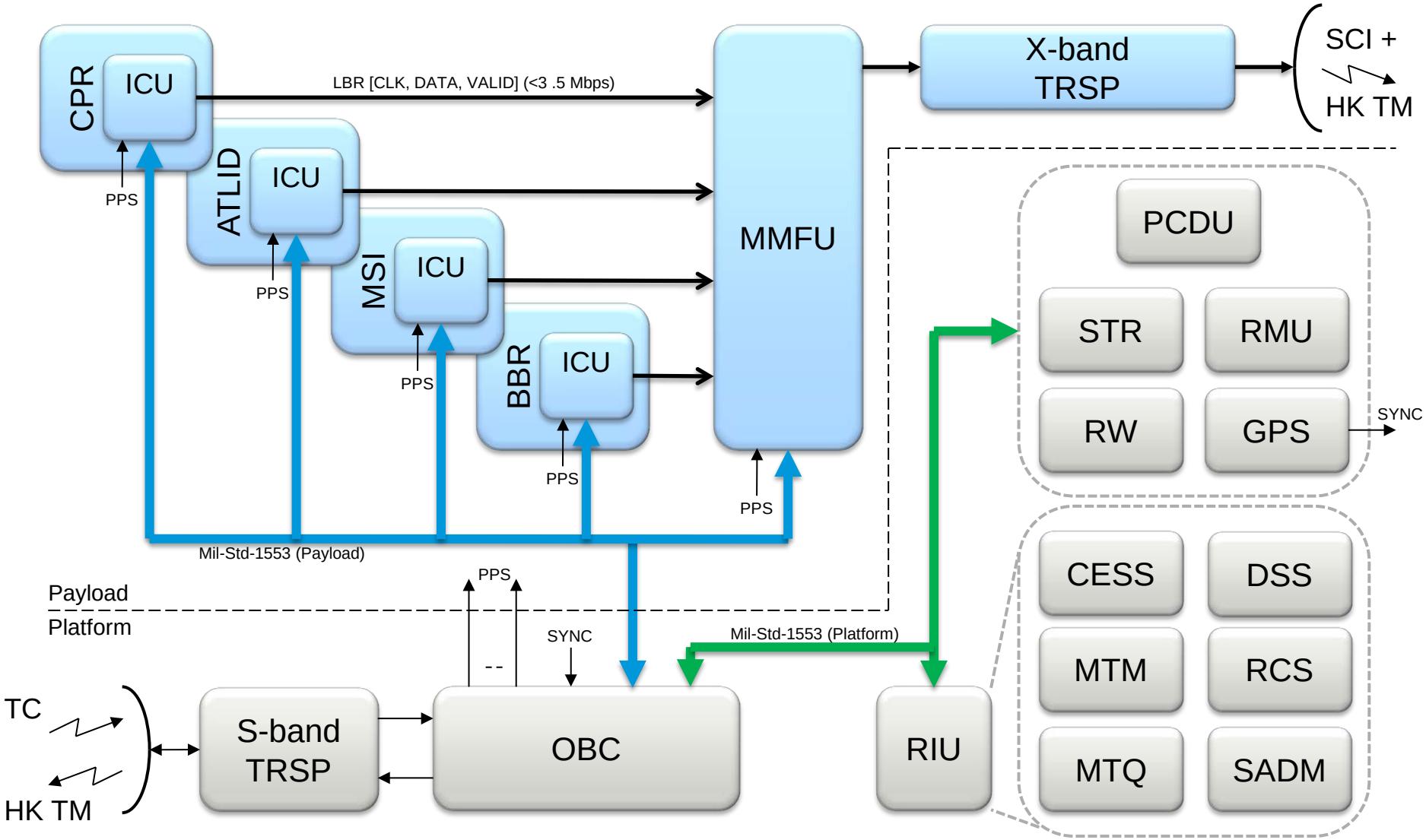

PF/PL Architecture & Interfaces (7/7)

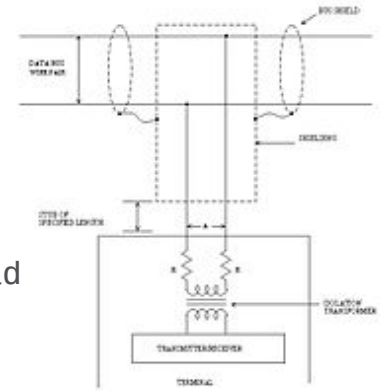

- **Mil-Std-1553B**
  - Architecture
    - Separate Platform and Payload bus
    - Simplifies bandwidth allocation
    - Allows for different FDIR approaches for Platform and Payload
    - Partitioning during spacecraft integration and test
  - Higher Layer Protocol
    - Instrument Control Units (ICUs) and MMFU are PUS terminals
    - Higher Layer Protocol is similar to ECSS-E-ST-50-13C
  - Lessons Learned
    - Very useful with a standard, however…
      - Details in the Higher Layer Protocol specification often overlooked or misunderstood.
      - Confusion between
        - Validation of Mil-Std-1553B (SAE4111, 4112 etc.)
        - Validation of Higher Layer Protocol
      - **Higher Layer Protocol verification/validation/error injection is essential => PISA**

Payload Interface Simulator (PISA) (1/3)

Photo: SSBV

- **Purpose**
  - Simulate/emulate Platform side of all electrical I/F to the Payload
- **Background**
  - Support for CPR (JAXA)
    - Large Instrument
    - Geographical distance
    - PUS/European standards
  - Provided by SSBV (NL)
- **Today**
  - Usage extended also to:
    - European instrument suppliers
    - MMFU supplier (MMFU Test Equipment)
    - Cost and Risk mitigation
    - Independent reference station
  - Total of 6 PISAs in use
  - Small customisation per user
    - No of discrete interfaces

Payload Interface Simulator (PISA) (2/3)

Photo: SSBV

- **Key Functionalities**
  - Simulate OBC TC/TM sequences
  - Mil-bus Higher Layer Protocol Validation
  - Acquire Instrument Data
  - PPS/Time Distribution Testing
  - Power (LCL) Simulation

- **Interfaces**
  - Mil-Std-1553B
    - Bus Controller, Bus Monitor, Remote Terminal
    - EarthCARE Higher Layer Protocol
  - Pulse Per Second (PPS)
  - Discrete Interface
    - Thermistor, Relay Status
    - Pulse Commands
  - Payload Data Interface (LBR)
  - Power Front End Interface

Payload Interface Simulator (PISA) (3 / 3)

Photo: SSBV

- **Lessons Learned**
  - Test of error cases virtually only possible before unit is integrated in the Spacecraft

  = >

  - Extremely useful for error injection
  - Allowed detection of several misunderstandings
  - **Existing PISA does not include predefined test suites**

Conclusion

- **Several complex instruments**
  - Use of Intelligent ICUs simplifies integration and testing
  - X-strapping approach for Science data to be considered
    - *=> MMFU <-> Instrument*

- **Higher Layer Protocol Requirement Specification**
  - Higher Layer Protocol needed for PUS Packet Distribution over Mil-bus
  - Misunderstandings of Higher Layer Protocol specification
    - *=> Provide also a Test Specification*

- **A common validation tool is very useful, c.f. PISA**
  - For EarthCARE a toolbox was provided but no test suites
    - *=> Provide validation test suites:*
      - *Mil-bus Higher Layer protocol*
      - *Time Distribution*
      - *Common PUS Services and Mode Management*

- **Issues with On-Board Time Distribution and Synchronisation**
  - *=> Handbook*

Thank you …

… for your attention