Avionics System Reference Architecture - ASRA – consolidation study

ASRA Team presentation

Objectives of the ASRA study

- The aim of ASRA is to define an avionics reference architecture meeting the needs of the various mission domains. Commonality between the solutions recommended for each domain will be maximised whenever possible. The work will be focused on data management and communications architectures.

Reference approach for:

- Definition of functions
- Performance needs
- Security
- FDIR
- Function allocation to on-board units
- Interconnection and operations of avionics units
- Interconnection and operations of payload units
- Time distribution & synchronisation
- Space/Ground interfacing (platform & payload)

Work logic

- First work package to agree on a common functional architecture and outline the main functions per functional block
- Four subsequent work packages for:
  - Ground to Space interfacing
  - OBC functional requirements
  - RTU functional requirements
  - Platform/Payload interfacing

Mission domains considered

- Science and Earth Observation missions with up to 12 years duration to:
  - LEO
  - GEO
  - Lagrange points
  - Interplanetary space
- Telecom missions with up to 15 years lifetime
- The excluded missions are:
  - Manned missions
  - Launchers
- There is however nothing that prevents the system from being used in these missions if the special needs can be somehow fulfilled.

Typical view of the avionics

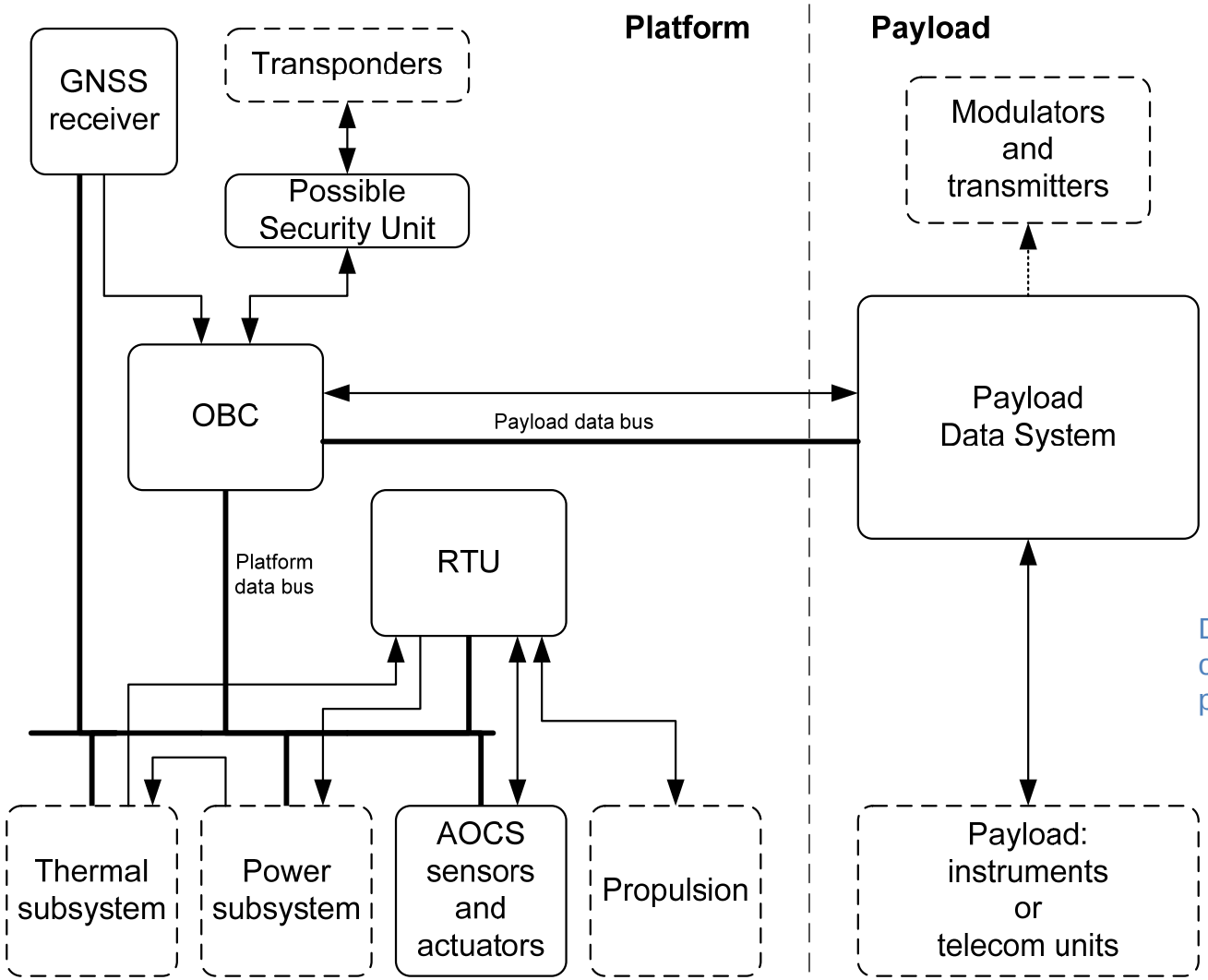

Dashed functions are ouside of ASRA perimeter

Avionics architecture Some of the variabilities

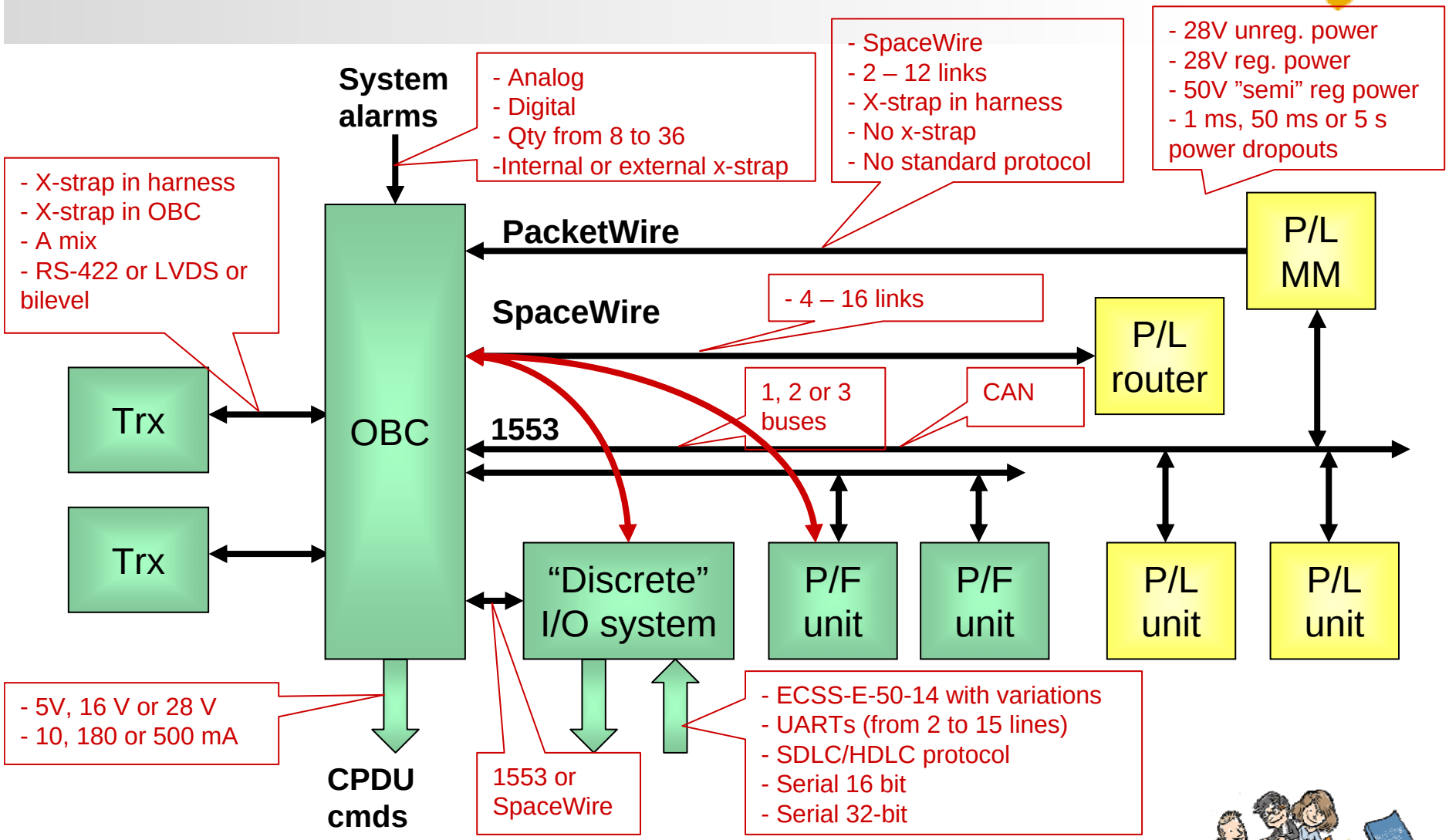

Avionics functions mapped on units

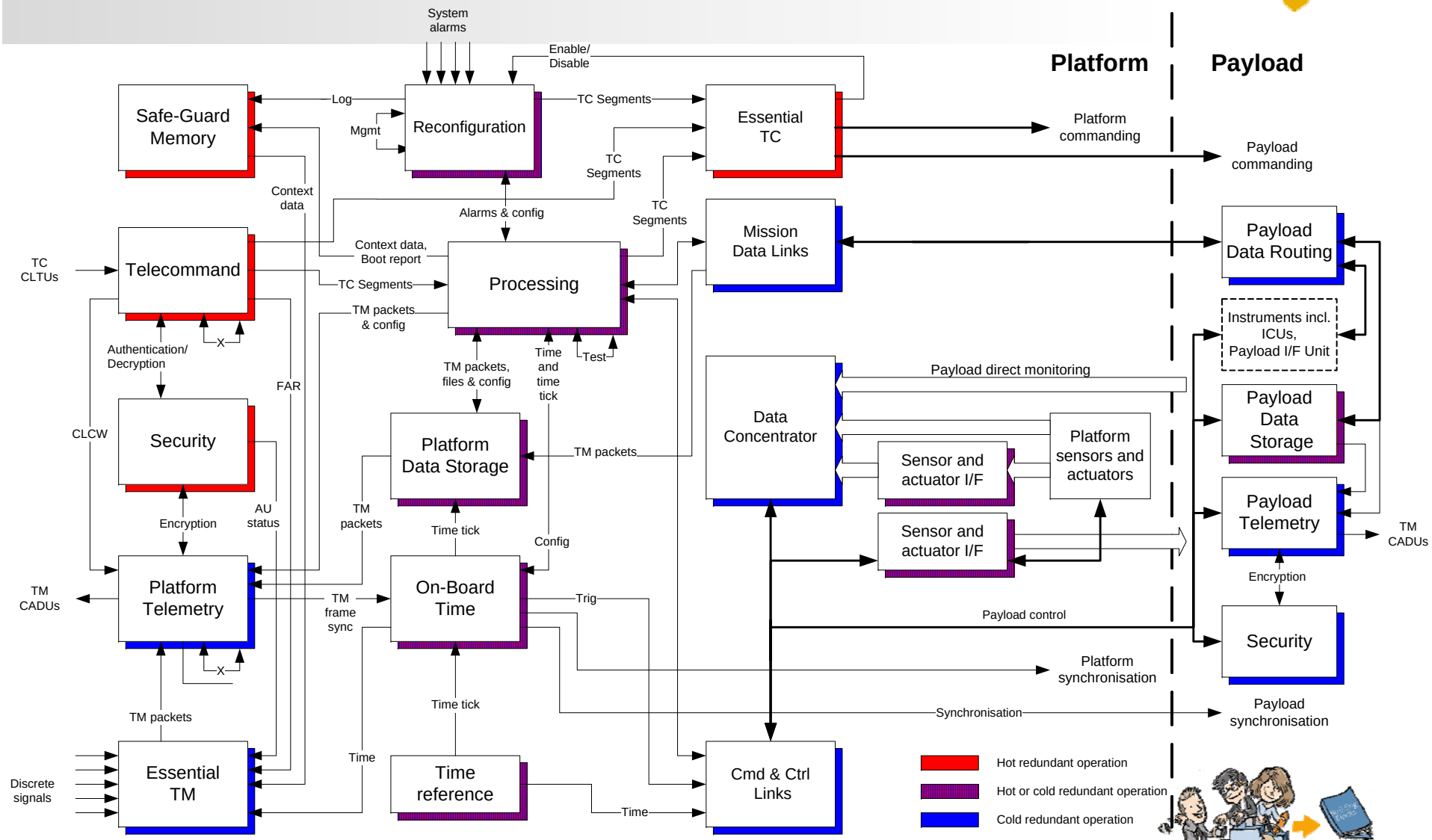

Avionics functions mapped on units

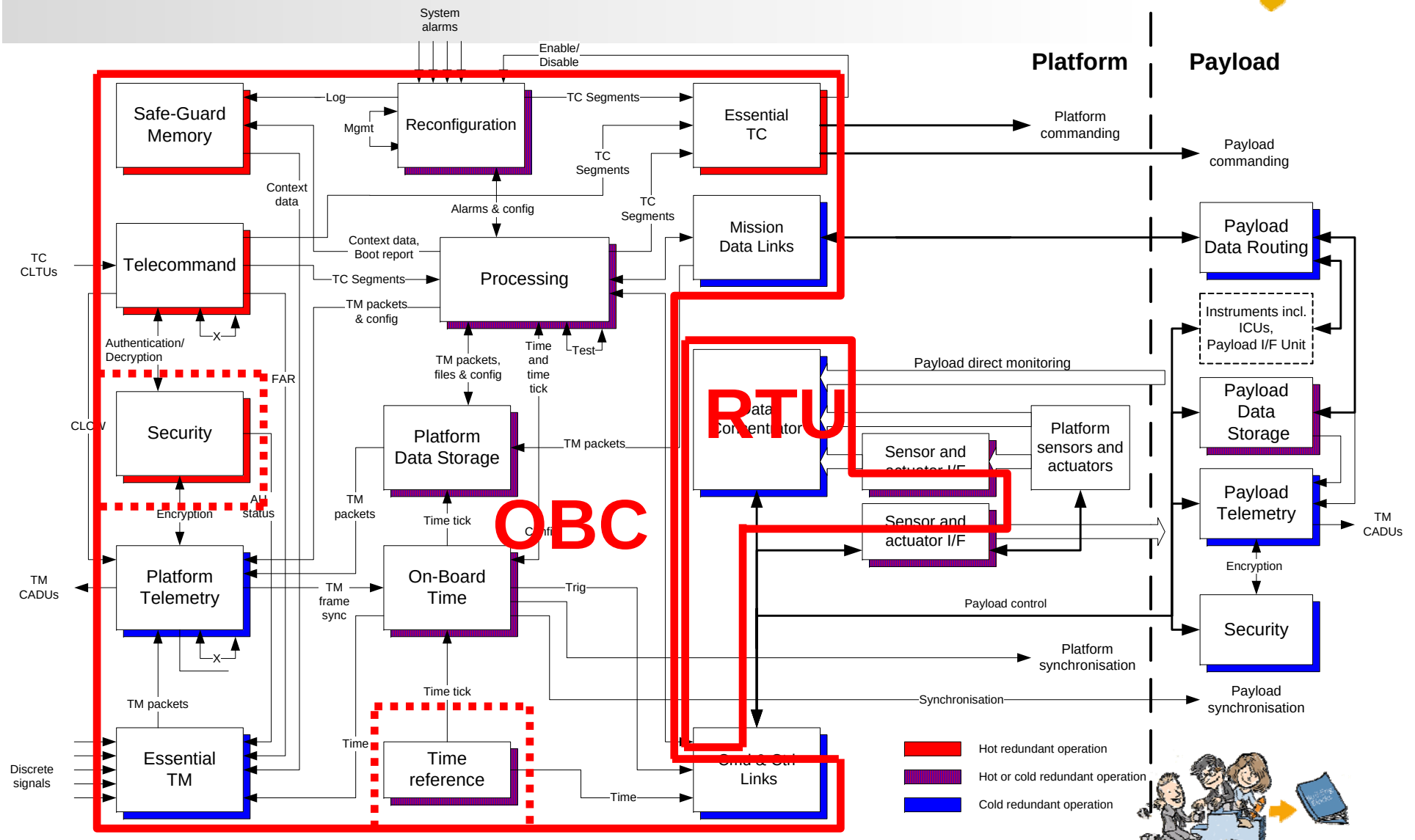

OBC functions

- TC decoding and distribution
- TM collection, formatting and coding
- Essential TC
- Essential TM (optional)
- Mass Memory for storage of data, e.g. TM
- On-Board Time counting and distribution
- Application software execution platform (=processing)
- Communication links to platform and payload equipment
- Discrete interface communication to platform and payload equipment
- FDIR function
    - Safeguard memory
    - Reconfiguration function

TC decoding

- Hot redundant
- Four inputs from transponders
- Operates at up to 64 kbps
- No major evolution foreseen

- Define settings (VC IDs etc.)
- Freeze MAP allocation

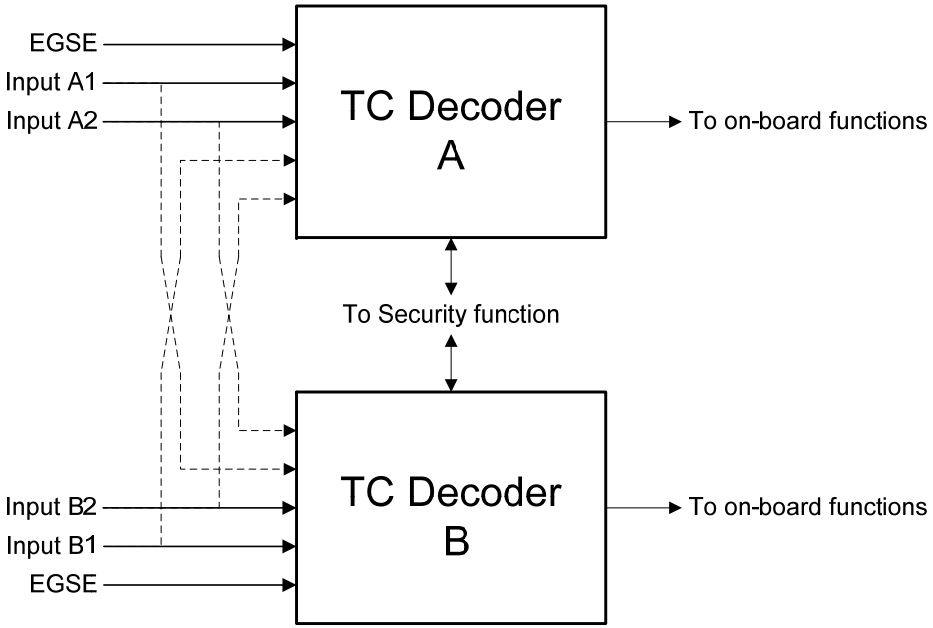

TM encoding

- Cold redundant
- One output per transponder
- Operates up to 10 Mbps
- No major evolution foreseen
- Freeze VC allocation

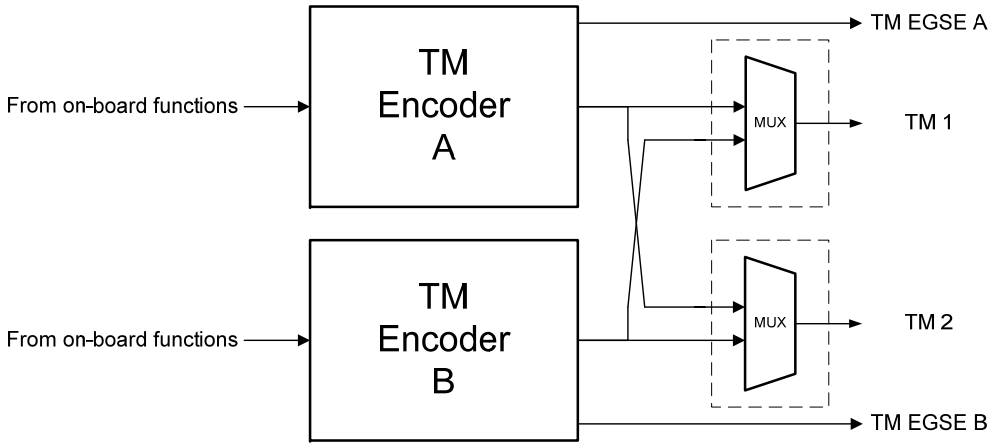

Security function

- Hot and cold redundant (TC and TM respectively)
- May interact at different levels in the TM/TC protocols
- Same data rates as TM/TC
- Propose that current solution for GMES and MTG is adopted for all ESA missions
- Evolution towards CCSDS recommendations in a longer perspective

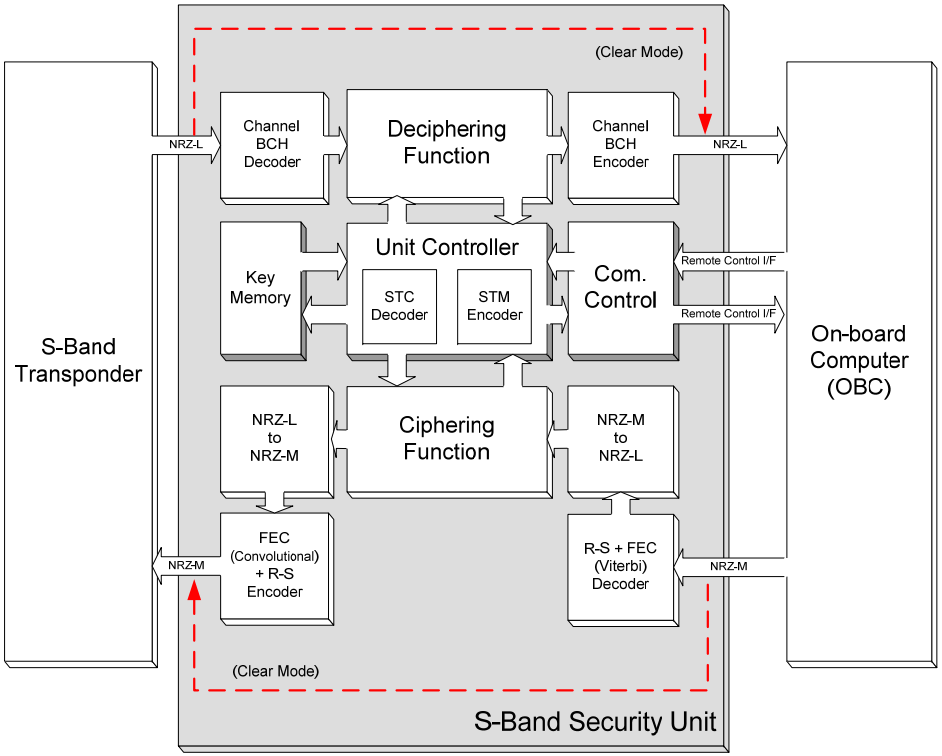

Example:
Standalone Security Unit

Processing function

- Cold or warm redundant
- Multiple interfaces, also interfaces the Application Software
- 10 – 40 MIPS performance
- 5 – 15 s switch-over time, 0,1 – 1 s if warm redundant
- Boot with or without self-test
- Evolution with multi-core CPUs and larger memories
- Evolution of Application Software interface from HDSW to SOIS subnetwork layer interface
- Evolution of Time and Space Partitioning between different applications may require new functions in hardware and basic software

Command and control link function

- Connected to:
  - Platform sensors/actuators with a direct interface to the data link
  - Platform Input/Output concentrators (RTUs)
  - Platform subsystems units (e.g. PCDU)
  - Payload units which generate house keeping telemetry and/or set the configuration of the payload. Examples are :
    - Payload dedicated Input/Output concentrator (Payload RTU)
    - Payload devices such as Channel Amplifiers in a telecom payload
  - Payload units for distribution of PUS packets to be further processed for payload command & control
- Possible candidates:
  - MIL-STD-1553B data bus, the most used solution today.
  - CAN bus, flown on SMART-1 and is considered for some future applications such as :
    - Planetary rover vehicles and landers
    - Telecommunication payloads
  - A deterministic version of the SpaceWire network (named SpaceWire-D), which is still at R&D stage
  - Dark horses in the future: Power line communication and wireless

Mission Data link function

- Interconnects the platform processing and space-ground communication resources with on-board entities, e.g.:
  - Distribution of ancillary AOCS data by the OBC to a payload unit
  - Distribution of platform telemetry packets generated inside the OBC to be delivered to Ground using payload downlink capabilities
- Possible candidates
  - MIL-STD-1553B data bus, the most common solution today
  - CAN bus (see comment in the previous section)
  - SpaceWire (point-to-point)
  - SpaceWire network (through a router) in case a significant number of units is to be interconnected.
  - A SpaceWire-D), (see comment in the previous section)

On-board Time function

- Maintaining a spacecraft time reference
- Time on CUC format
- Datation of on-board events
- Distribution of time information to on-board users (AOCS sensors, payloads) via processing function and command and control link
- Distribution of synchronization pulses to on-board users (AOCS sensors, payloads) via discrete electrical lines, Command and Control link and/or Mission Data link
- No major evolution foreseen

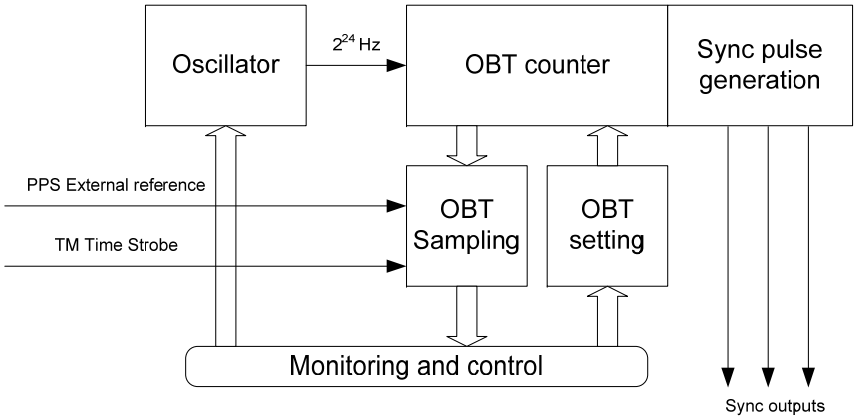

Platform Data Storage

- Operates in hot or cold redundancy
- Stores spacecraft housekeeping data during non-visibility periods
- Stores operational data (mission timeline, OBCPs etc.).
- Supports random access and Packet Store access
- Typical size 4 – 16 Gbit
- Evolution with file transfers and size up to 200 Gbit

Payload data storage

- Operates in hot or cold redundancy
- Storage capacity from a few hundred Gbit to more than 2 Tbit
- Stores instrument mission data arriving via dedicated serial instrument interfaces into files or packet stores
- Stores satellite housekeeping and ancillary data from the OBC into files or packet stores
- Optional data compression
- Playback of stored data at rates up several hundred Mbps.
- Reception of commands from the OBC
- Provision of telemetry to the OBC
- Evolution with file transfers, higher input and output rates and sizes up to several Tbit

Safeguard memory function

- Provides a secured mean to store the current context used by the active processor after its boot
- Two identical modules in hot redundancy
- Each module provides two separate banks
  - Volatile memory (typ. 512 kB)
  - Non-volatile memory (typ. 256 kB)
    - Some registers can be written directly by the ground (optional)
- High data rate between SGM and processor
  - To limit the processor switch-over duration
  - 5 Mbps in read mode (SGM -> processor)
  - 75 kbps in write mode (processor -> SGM)

FDIR function

- Levelled approach
- Levels 3 and 4 considered in this study

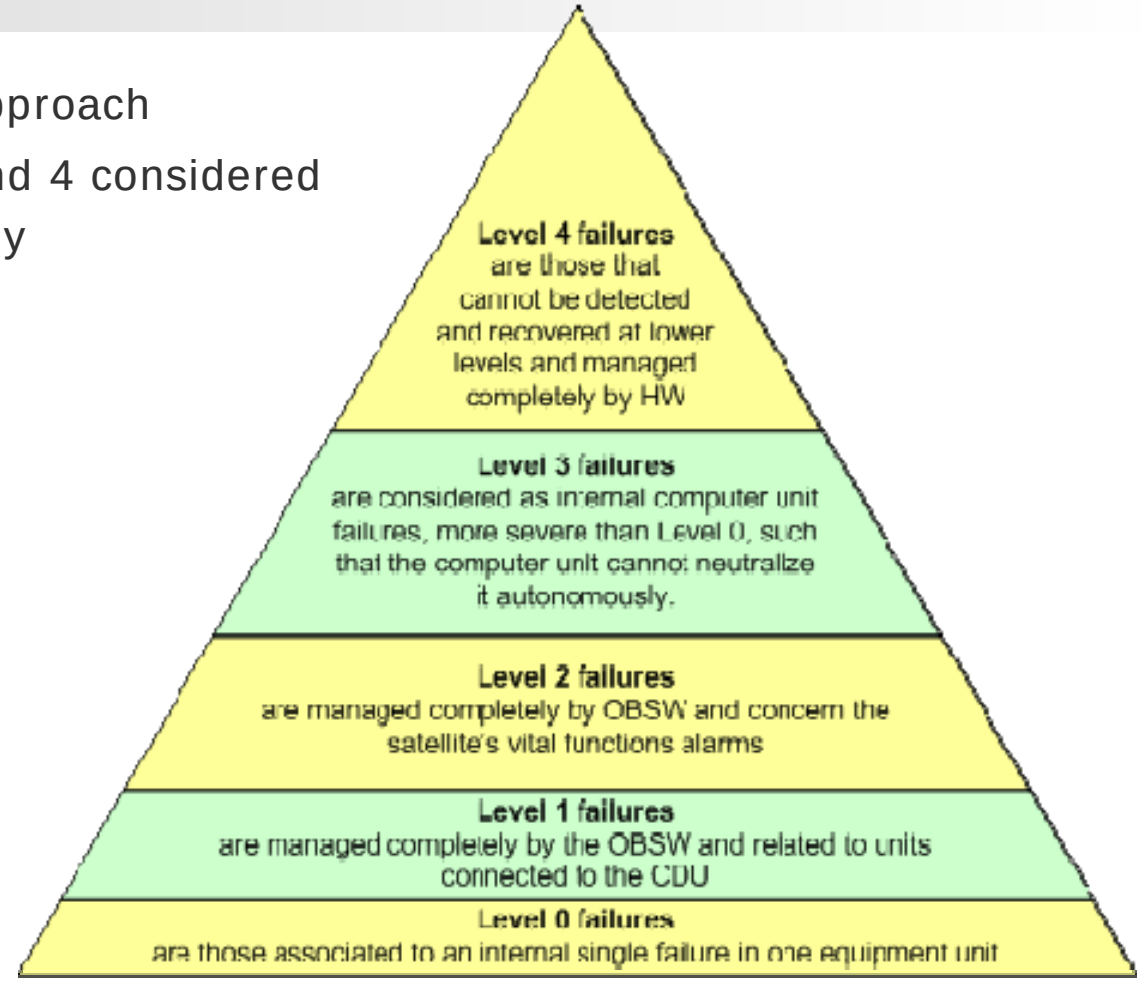

Discrete I/O function

- Handles all discrete interfacing with platform and payload except:
  - Essential TC and TM
  - Synchronisation
- Handles secondary data acquisition/commanding links
- Provides power to some sensors and actuators
- Optional local processing of sensor data to for instance generate system alarms

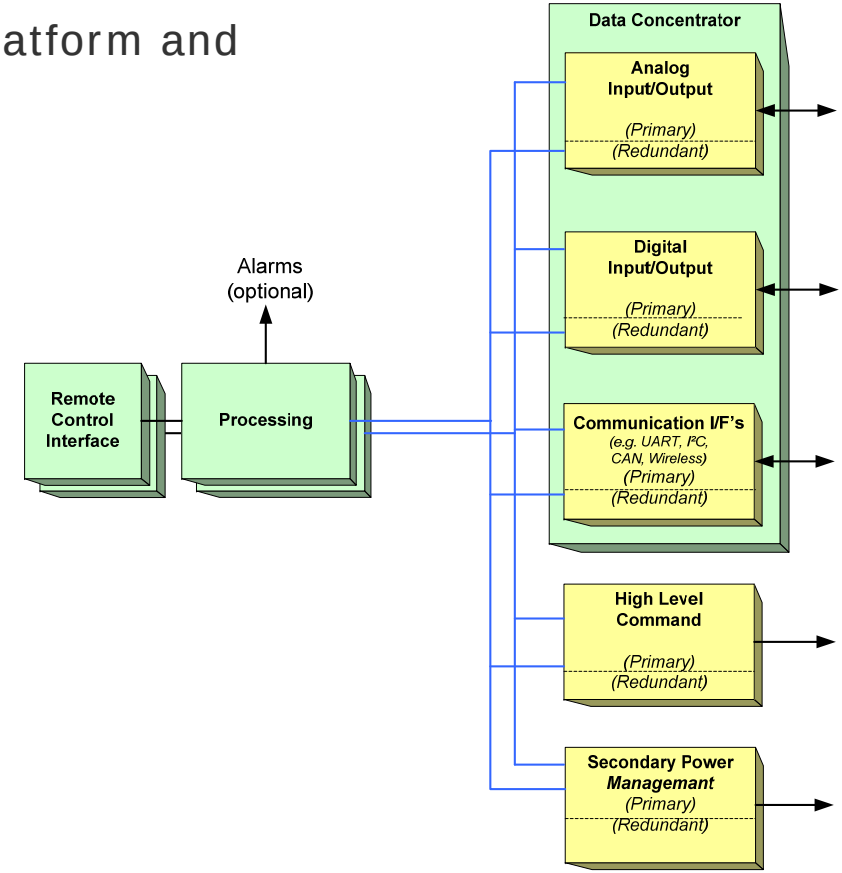

Sensors

- Smart sensors provides a standardized digital interface
- Dumb sensors provides data through specific interfaces

Device	LEO/MEO mission	Other mission	smart	dumb	Synchronization need
Star tracker	X	X	X		X
Gyros	X	X	X		X
Inertial measurement unit		X	X		X
Coarse rate sensor	X	X		X	
GNSS receiver	X		X		Provides PPS
magnetometer	X			X	
fine sun sensor	X	X	X		X
coarse sun sensor	X	X		X	
fine Earth sensors		(X)	X		X
coarse Earth sensor		X		X	
Pressure transducer	X	X		X	

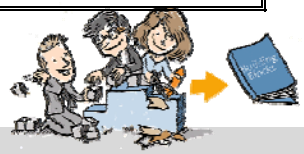

Actuators

- Mechanism actuators
  - Solar array Drive mechanism
  - Antenna Pointing Mechanism
- AOCS actuators
  - Reaction Wheel
  - Control Moment Gyro
  - Magneto-torquer
- Propulsion devices
  - Propulsion valves

Reference Time Generator function

- Maintains an on-board time reference or frequency reference
- If the orbit allows it, a GNSS receiver is used for this function
  - Provides a universal time
  - 200 ns to 1 us accuracy
  - Provides also position and velocity of the spacecraft
- The frequency reference is a local stable clock
  (atomic, oven-stabilised, temperature compensated or standard XO)

Mapping of functions to mission classes

Function	LEO	GEO	Lagrange	Interplanet.
TC	O	O	O	O
Platform TM	O	O	O	O
Security	Auth+P/L enc	Auth+P/L enc	Auth	Auth
Essential TC	O	O	O	O
Essential TM option	O	O	O	O
P/F data storage	O	-	O	O
On-Board Time	O	O	O	O
Time Reference	GNSS	XO	TCXO/OCXO	TCXO/OCXO
Processing	O	O	O	O
Safeguard memory	O	O	O	O
Reconfiguration	5-30 s	~30 s	5- 30 s	5 – 30 s
Mission data link	O	O	O	O
Cmd & Ctrl link	<300 kbps	<300 kbps	<300 kbps	<300 kbps
Data concentrator	O	O	O	O
P/L data storage	In P/L	-	P/F or P/L	P/F or P/L
Payload TM	In P/L	P/F or P/L	P/F or P/L	P/F or P/L

Mapping to physical architectures (example)

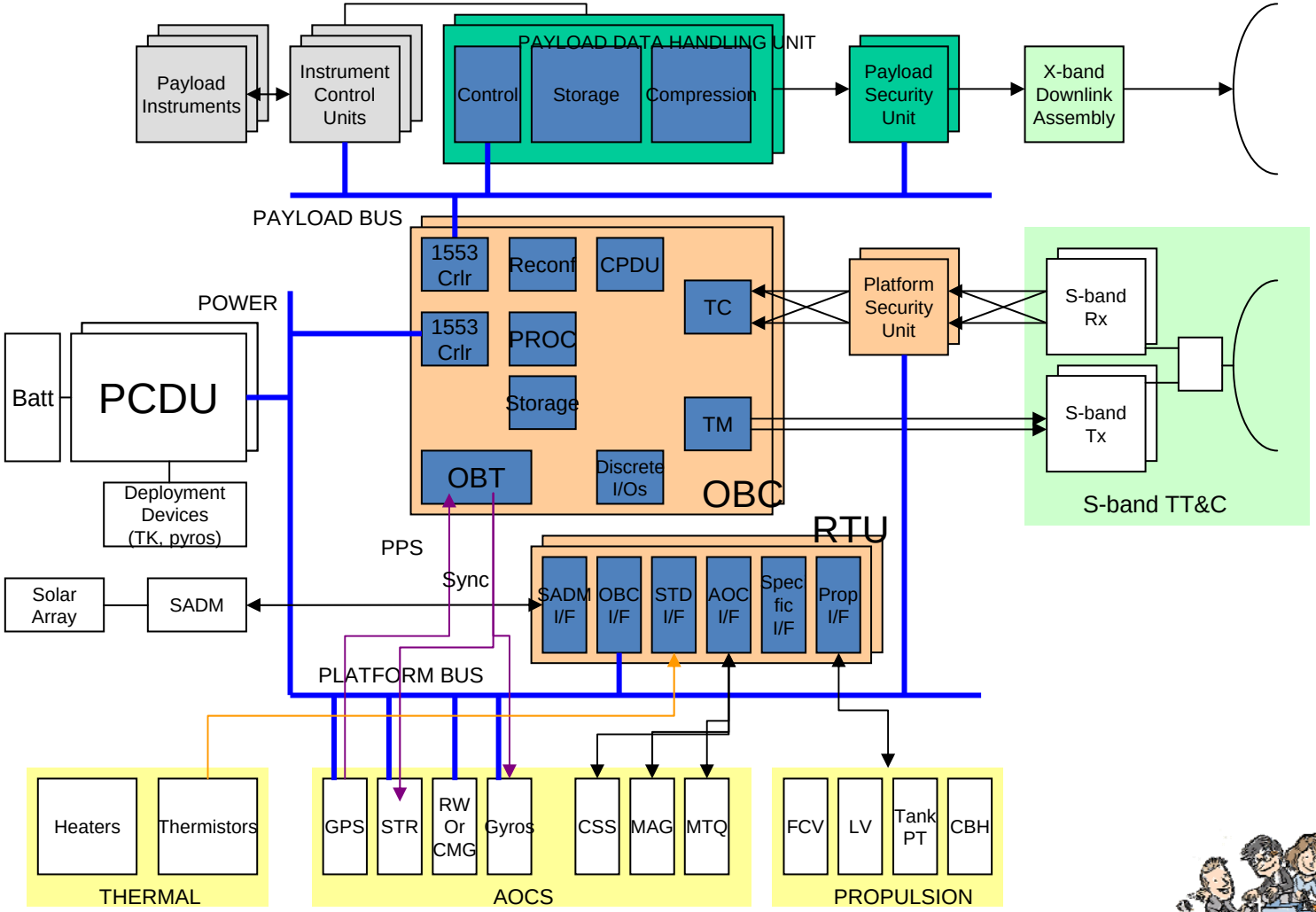

Contact

Feedback: savoir@esa.int