This document and its content is the property of Astrium [Ltd/SAS/GmbH] and is strictly confidential. It shall not be communicated to any third party without the written consent of Astrium [Ltd/SAS/GmbH]

Avionics modelling and simulation

ADCSS 2011 (Avionics Data, Control and Software Systems)

MBAVV (Model-Based Avionics verification & Validation)

Philippe GAST / David LESENS

Monday, 07 November 2011

All the space you need

ASTRIUM
AN EADS COMPANY
Space Transportation

This document and its content is the property of Astrium [Ltd/SAS/GmbH] and is strictly confidential. It shall not be communicated to any third party without the written consent of Astrium [Ltd/SAS/GmbH].

Overview

- Operational
  - Modelling of the Ariane 5 mission sequences in SysML
  - Verification by model simulation
- R&T
  - Functional modelling of the avionics in SysML
    - Verification by simulation and formal proof
  - Detailed modelling of the digital system in SystemC
    - Verification by simulation
  - Automatic generation of software validation test cases from a functional system SysML model

Modelling of Ariane 5 sequences Verification by simulation

Ariane 5 ME program

- Modelling of the avionics design
- Automatic documentation generation
  - Of the avionics design
  - Of the software specification
- Verification by simulation
  - ➔ Insurance that the avionics design is correct
  - ➔ Decrease of the errors discovered during the validation

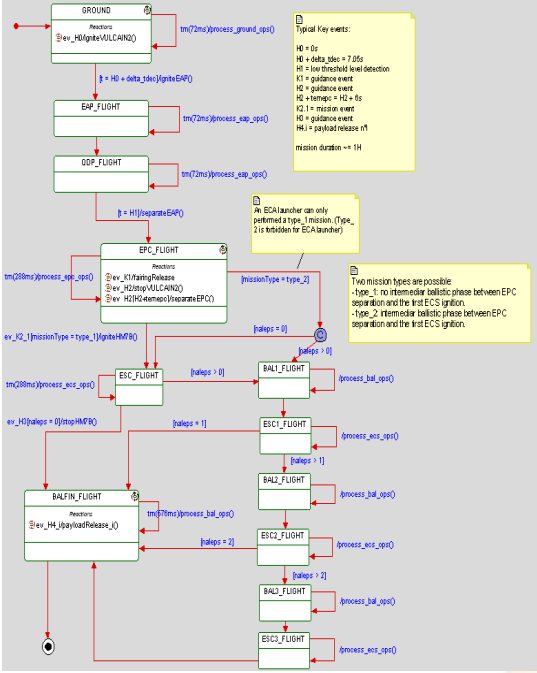

This document and its content is the property of Astrium [Ltd/SAS/GmbH] and is strictly confidential. It shall not be communicated to any third party without the written consent of Astrium [Ltd/SAS/GmbH].

Avionics models and formal proof

ESA “Full MDE” R&T project

- Modelling in SysML
  - Of the software behaviour
  - Of the equipment behaviour
  - Of the hardware failures (processors, buses, equipment)

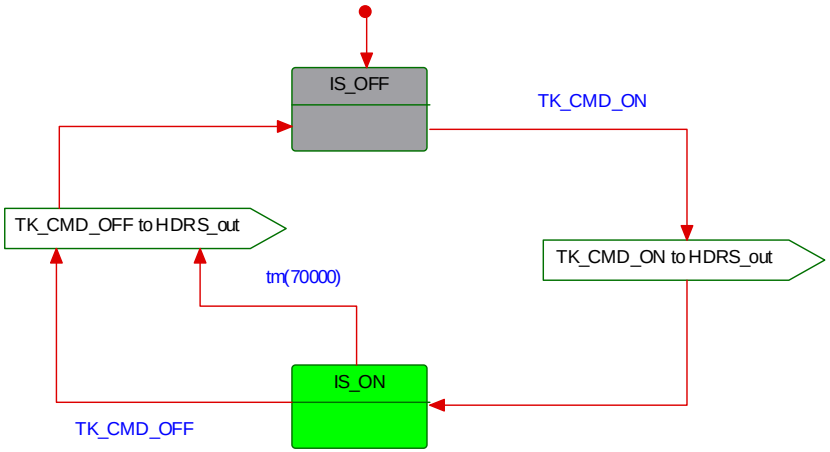

- Verification of the avionics design
  - By simulation
  - By formal proof (IFx toolbox)

This document and its content is the property of Astrium [Ltd/SAS/GmbH] and is strictly confidential. It shall not be communicated to any third party without the written consent of Astrium [Ltd/SAS/GmbH].

Virtual Digital System (work in progress)

R&T CNES

- Objectives
  - Verification of the digital system specification
  - Early validation of the software
    - When the real digital system is not yet available
- Virtual Digital System modelled in SystemC
  - Partially manually
  - Partially generated from a SysML model

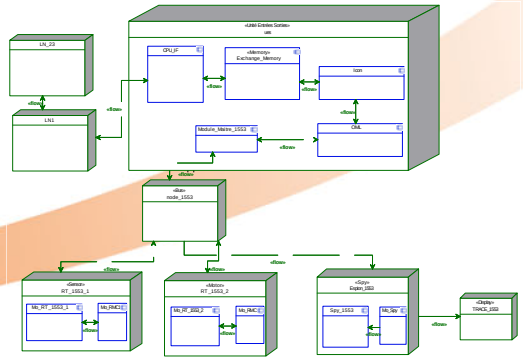

This document and its content is the property of Astrium [Ltd/SAS/GmbH] and is strictly confidential. It shall not be communicated to any third party without the written consent of Astrium [Ltd/SAS/GmbH].

Software validation tests from a system model (work in progress)

Internal R&T

SysML system engineering model

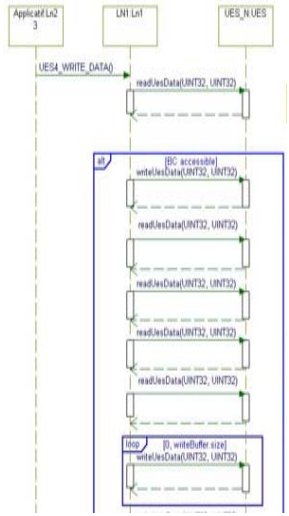

Mission data

Automatic generation

PERL scripts for the software validation

…
…
…
…
…
…

Flight software

Automatic execution

OK / NOK

(in replacement of manual test cases)

This document and its content is the property of Astrium [Ltd/SAS/GmbH] and is strictly confidential. It shall not be communicated to any third party without the written consent of Astrium [Ltd/SAS/GmbH].